Lineabox^Easy

SALICE

ENGLISH

Lineabox^{Easy}

The innovative aluminium drawer with a timeless design

Lineabox Easy is the **aluminium** drawer by Salice with essential and elegant shapes.

The extremely reduced thickness and the clean and refined aesthetics make it a **versatile and multipurpose** element.

Aluminium, already chosen by Salice in the very first Lineabox version, is among the most eco-sustainable materials known with significant energy saving characteristics and complete recyclability.

Lineabox Easy was born from Salice's effort to implement every value-added optimization to improve the existing product, its performance and the perceived quality of the product.

Lineabox Easy The innovative aluminium drawer with a timeless design

It is available in 4 different heights in the versions with 2 or 3 sides.
The 2-sided version includes an option that, by hiding the wooden back, further enhances the product.

• Lineabox Easy 2-Sided •

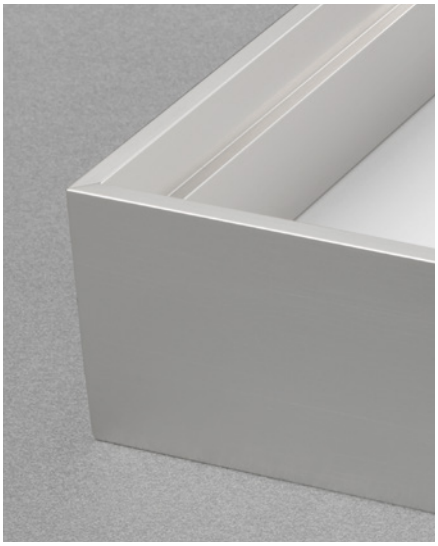

• Lineabox Easy 3-Sided •

• Lineabox Easy 2-Sided - Inset Back •

The Lineabox Easy range is completed by the under-sink version and the front panel for internal drawer, customisable with a decorative insert and also available in a version without insert.

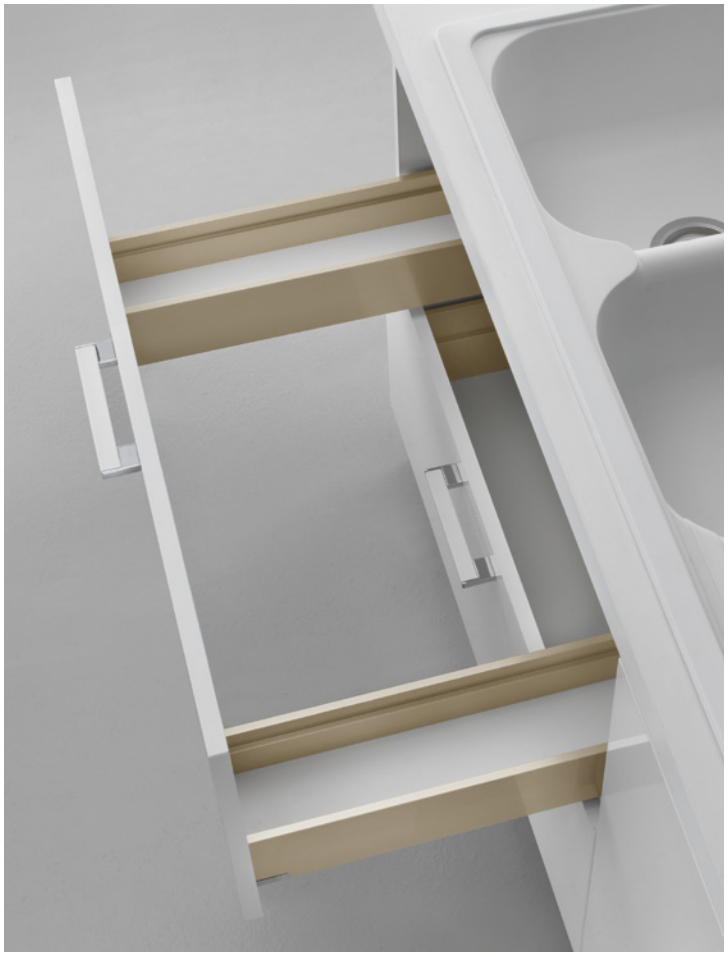

• Lineabox Easy - Under-sink drawer •

• Lineabox Easy - Front panel for internal drawer • With decorative insert

• Lineabox Easy - Front panel for internal drawer •

The whole range is available in **four finishes**:

• White •
Epoxy paint with a matt finish

• Stainless steel •
Brushed anodization

• Champagne •
Brushed anodization

• Grey •
New elegant finish. Epoxy paint with a matt finish.

Lineabox Easy The innovative aluminium drawer with a timeless design

The extremely reduced thickness makes Lineabox Easy one of the thinnest drawers on the market.

The frontal fixing elements are inserted inside its structure and therefore no screws are visible.
In addition to the aesthetic element, Lineabox Easy has been designed with some details in order to facilitate the work of our customers:

1. Salice has **renewed the frontal fixing**: a completely re-engineered geometry combined with the use of a technopolymer with above-average performance has made the mounting and the removal of the drawer frontal significantly simpler, increasing resistance and stability even when using high front panels.

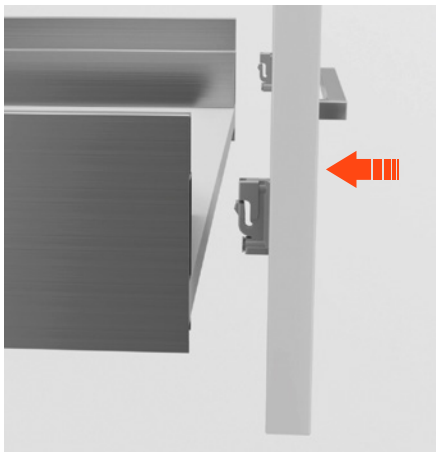
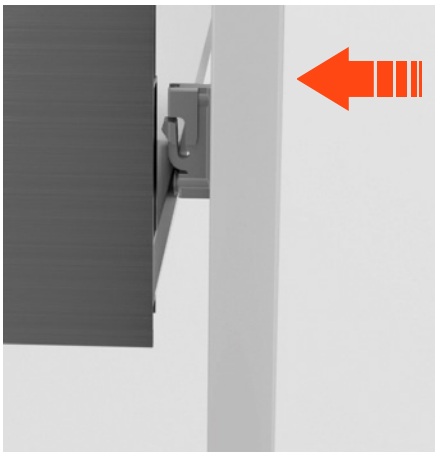
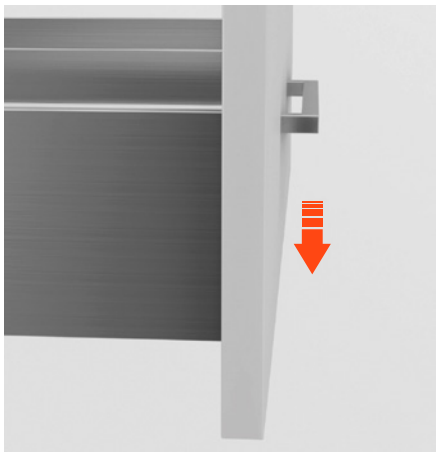

2. Lineabox Easy provides for a progressive simplification of the offer:

    1. **Profile cut to length** to ensure a finished and precise item.
    2. **Profile cut to length + premounted connecting fitting.**
    Small operation, but with great added value: I reduce the assembly time while ensuring the maximum cleanliness in the combination of the elements.
    3. **Kit** for the composition of a drawer including a pair of Salice runners: an acceleration in the search times for the order components, in order to produce a state-of-the-art drawer avoiding inefficient warehouses.

There is always the possibility to **create your drawer in complete freedom**, in the name of maximum modularity, to make your project possible starting from the profile.

Lineabox Easy can be assembled quickly with no machinery needed. It is is highly customisable and the dimensions of the back can be adapted to the width of the cabinet.

The product is completed by a **template for the drilling of the drawer frontal**; simply insert it into the front of the sides and adjust the sliders to obtain the correct position of the holes on the front panel. Our template, after the measurement phases on the cabinet, is locked on the front panel allowing directly the drilling through the appropriate slots, ensuring the frontal fixing in a precise manner.

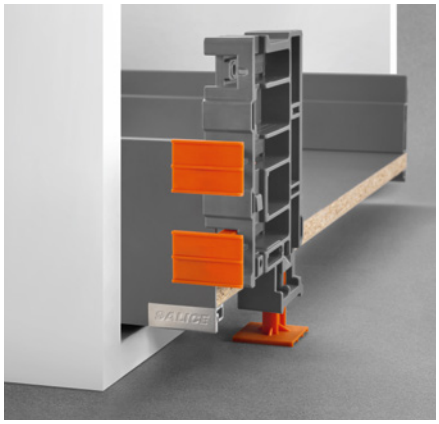
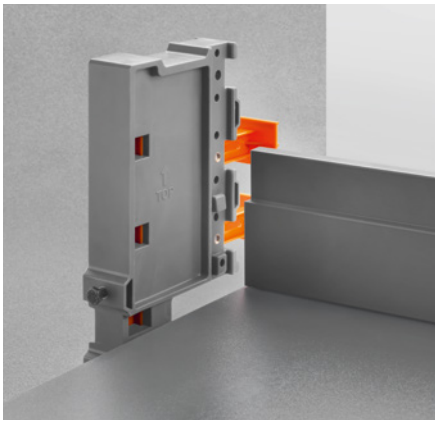
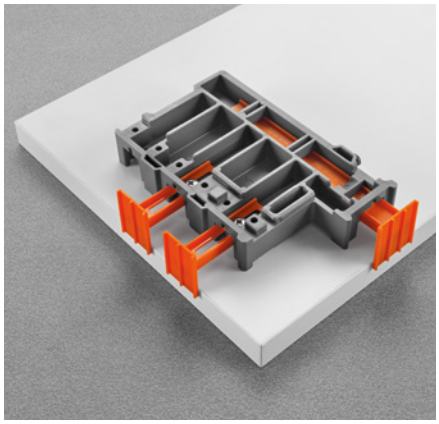

The drawer movement is fluid and silent thanks to the runners that complete the assembly:
Futura and Progressa are compatible with Lineabox Easy in all full-extension versions and for all the dimensional variants available in the catalogue.

Lineabox Easy

Index

2-Sided

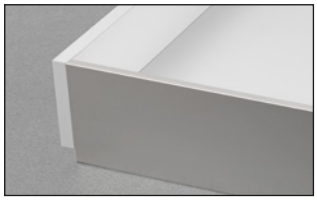

Metal side - H 101 mm page 10
Metal side - H 178 mm page 12
Metal side - H 237 mm page 14
Metal side - H 75 mm page 16

2-Sided - Under-sink drawer

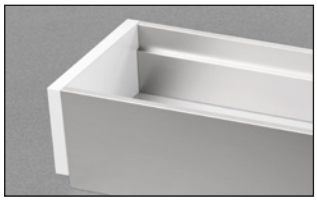

Metal side - H 101 mm page 20
Metal side - H 178 mm page 22
Metal side - H 237 mm page 24
Metal side - H 75 mm page 26

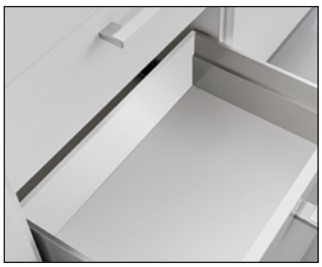

2-Sided - Inset Back

Metal side - H 101 mm page 30
Metal side - H 178 mm page 32
Metal side - H 237 mm page 34
Metal side - H 75 mm page 36

2-Sided - Under-sink drawer - Inset Back

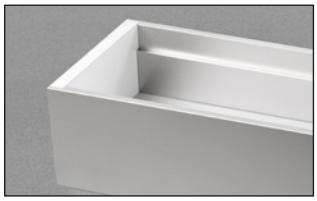

Metal side - H 101 mm page 40
Metal side - H 178 mm page 42
Metal side - H 237 mm page 44
Metal side - H 75 mm page 46

3-Sided

Metal side - H 101 mm page 50
Metal side - H 178 mm page 52
Metal side - H 75 mm page 54

3-Sided - Under-sink drawer

Metal side - H 101 mm page 58
Metal side - H 178 mm page 60
Metal side - H 75 mm page 62

Front panel for internal drawer

Metal side - H 101 mm	page 66
Metal side - H 178 mm	page 68
With insert - Metal side - H 101 mm	page 70
With insert - Metal side - H 178 mm	page 72
Metal side - H 75 mm	page 74

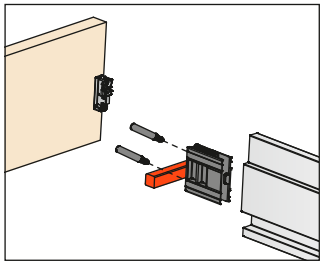

Assembly details

2-Sided	page 78
2-Sided - Inset Back	page 80
3-Sided	page 82

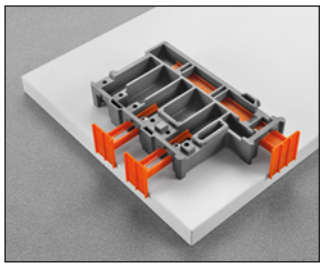

Accessories

Cover caps	page 86
Template for the drilling of the drawer frontal	page 86
Template for frontal and back connecting fitting	page 86
Reinforcing supports for the bottom of the drawer	page 86

Packing and finishes

Packing	page 88
Finishes	page 98

Lineabox^{Easy} - 2-Sided

Lineabox Easy - 2-Sided - H 101 mm

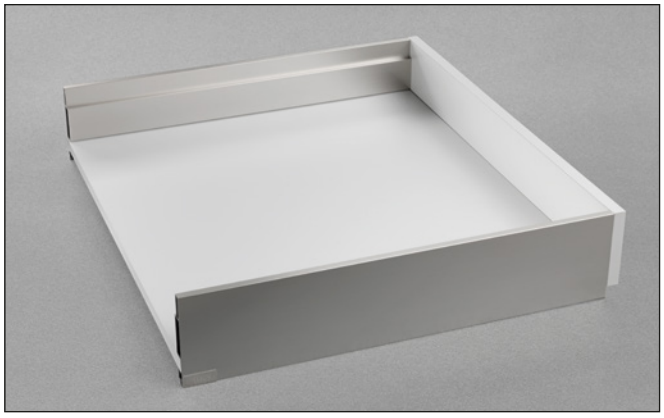

Lineabox Easy metal sides, wooden bottom and back panel.
Height of the side 101 mm - Internal height 72 mm.
For use with Progressa and Futura full-extension runners.

- Supplied in 3 metre length side profiles or cut to length
- Available with and without frontal and back premounted connecting fittings
- Available kit for the composition of a drawer including a pair of runners
- Rapid assembly system, with no machinery needed
- Available template for the drilling of the drawer frontal (optional)
- Rapid mounting and removal of drawer frontal
- Height, sideways and depth adjustment of the drawer incorporated in the runner fixing clips
- Bottom thickness: 16 mm
- Material: aluminium
- Sides: 90° cut end
- Finishes: White - Grey - Champagne - Stainless steel

Setting of the back and the bottom of the drawer

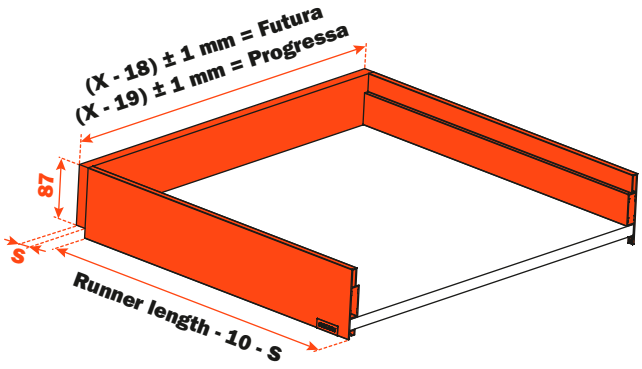

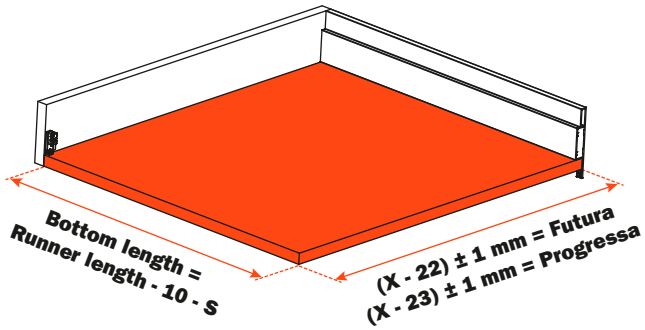

X = Internal width of the cabinet
S = Back thickness

Elements of the drawer

1	**SMGR12AGXA** Screw-on frontal and back fixing **SMGR12AGCA** Knock-in frontal and back fixing	4 pcs.
2	**AMGPXA3** Frontal and back connecting fitting	4 pcs.
3	**SCCX83H9** (Nickel-plated) **SCCX83H6** (Titanium) Cover cap with embossed logo **SCXX83H9** (Nickel-plated) Cover cap with silk-screen printed logo	2 pcs.

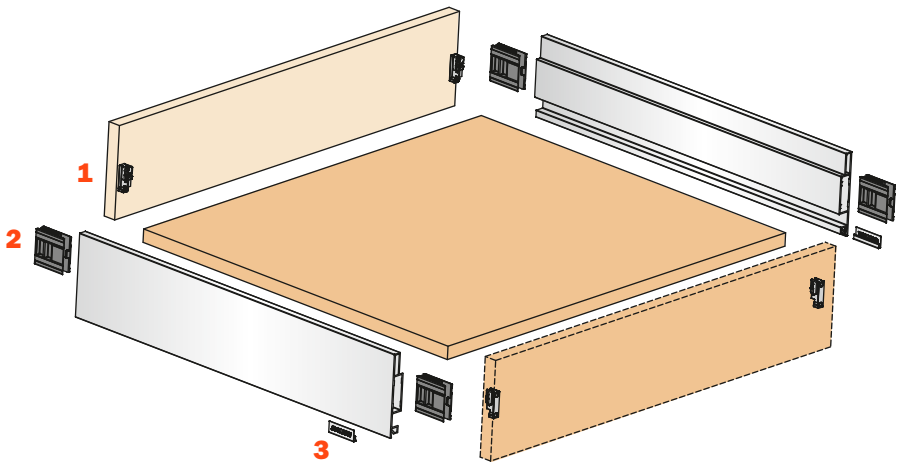

Dimensions

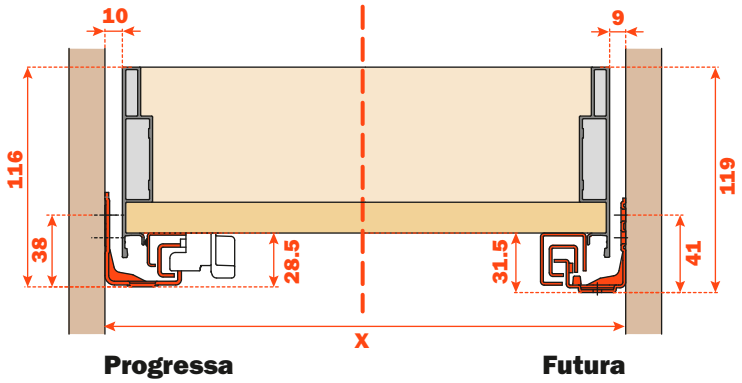

Dimensions of the metal side

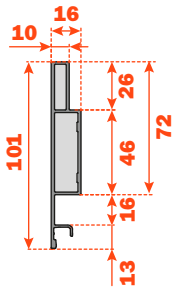

Frontal drilling

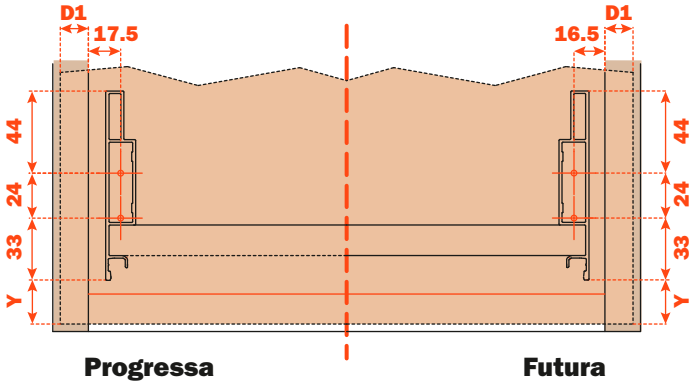

D1 = Frontal overlay on side of the cabinet

Y = Distance from the lower edge of the frontal to the Lineabox Easy side

The drilling of the frontal can be done using the **AGDLXA6 template**.

Back drilling

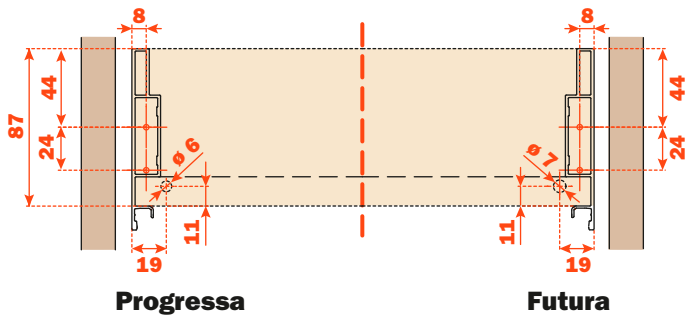

Lineabox Easy - 2-Sided - H 178 mm

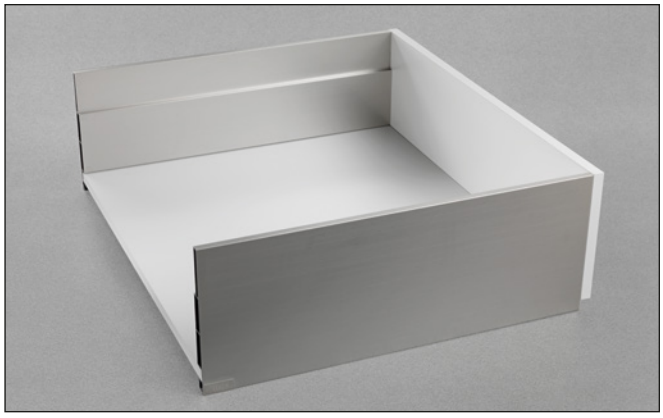

Lineabox Easy metal sides, wooden bottom and back panel.
Height of the side 178 mm - Internal height 149 mm.
For use with Progressa and Futura full-extension runners.

- Supplied in 3 metre length side profiles or cut to length
- Available with and without frontal and back premounted connecting fittings
- Available kit for the composition of a drawer including a pair of runners
- Rapid assembly system, with no machinery needed
- Available template for the drilling of the drawer frontal (optional)
- Rapid mounting and removal of drawer frontal
- Height, sideways and depth adjustment of the drawer incorporated in the runner fixing clips
- Bottom thickness: 16 mm
- Material: aluminium
- Sides: 90° cut end
- Finishes: White - Grey - Champagne - Stainless steel

Setting of the back and the bottom of the drawer

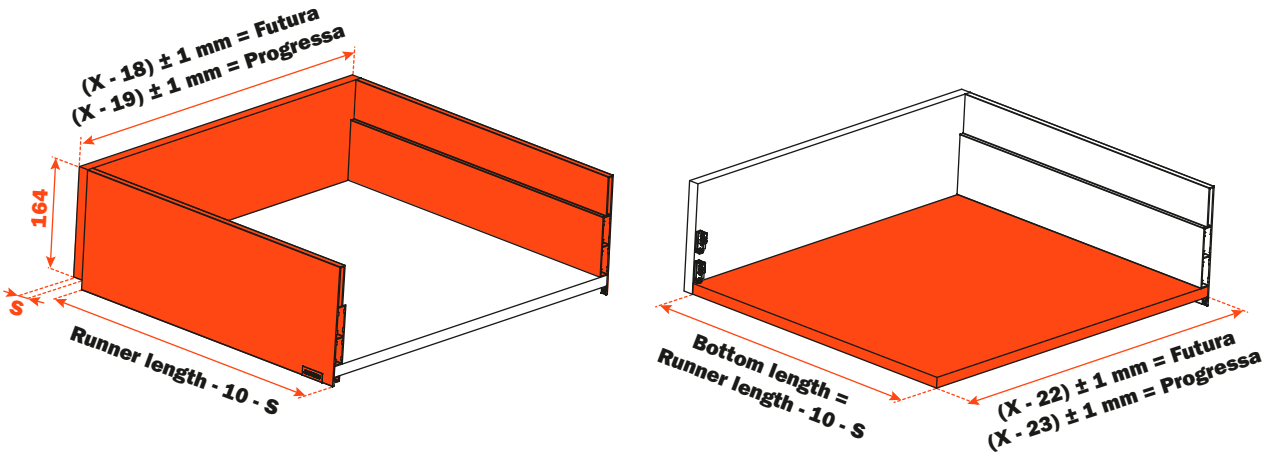

X = Internal width of the cabinet
S = Back thickness

Elements of the drawer

1	**SMGR12AGXA** Screw-on frontal and back fixing **SMGR12AGCA** Knock-in frontal and back fixing	8 pcs.
2	**AMGPXA3** Frontal and back connecting fitting	8 pcs.
3	**SCCX83H9** (Nickel-plated) **SCCX83H6** (Titanium) Cover cap with embossed logo **SCXX83H9** (Nickel-plated) Cover cap with silk-screen printed logo	2 pcs.

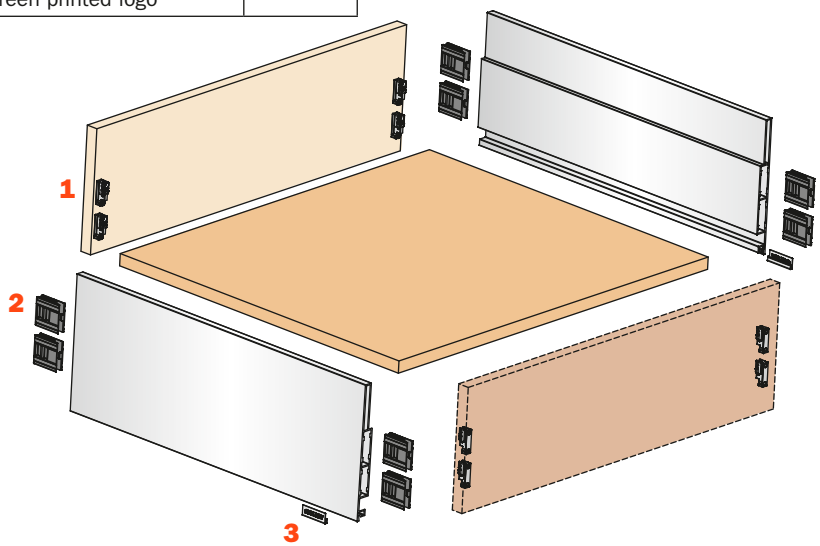

Dimensions

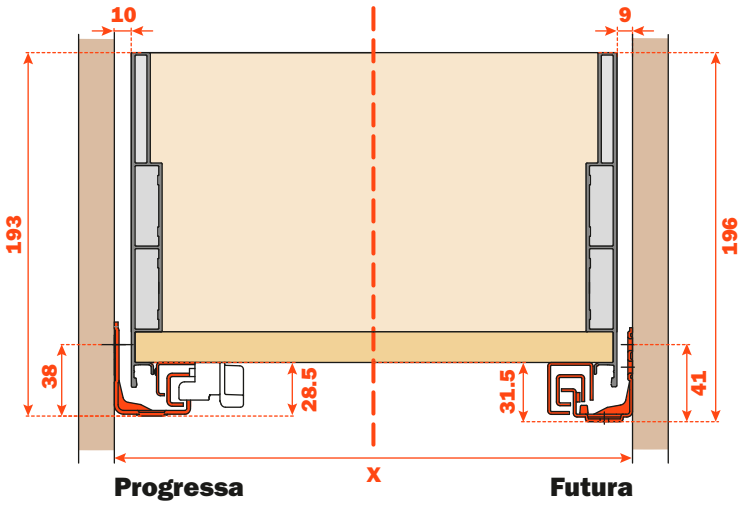

Dimensions of the metal side

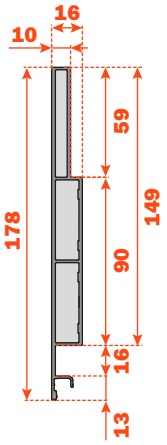

Frontal drilling

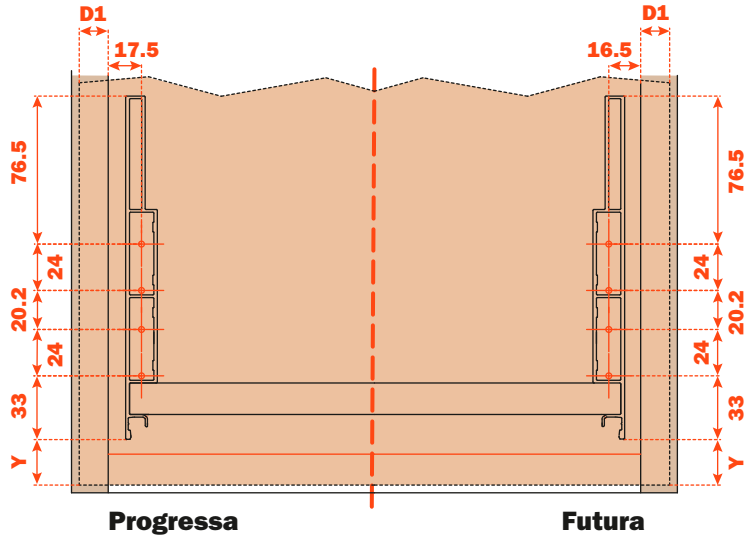

D1 = Frontal overlay on side of the cabinet

Y = Distance from the lower edge of the frontal to the Lineabox Easy side

The drilling of the frontal can be done using the **AGDLXA6 template**.

Back drilling

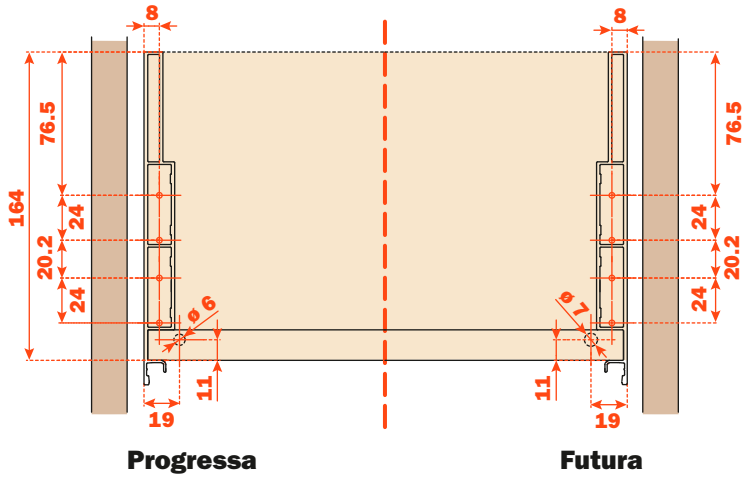

Lineabox Easy - 2-Sided - H 237 mm

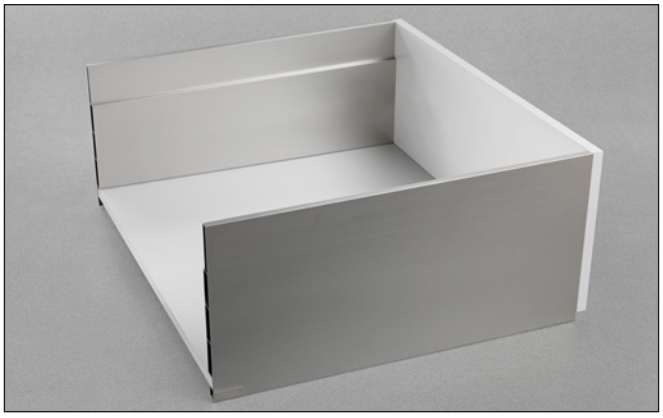

Lineabox Easy metal sides, wooden bottom and back panel.
Height of the side 237 mm - Internal height 208 mm.
For use with Progressa and Futura full-extension runners.

- Supplied in 3 metre length side profiles or cut to length
- Available with and without frontal and back premounted connecting fittings
- Available kit for the composition of a drawer including a pair of runners
- Rapid assembly system, with no machinery needed
- Available template for the drilling of the drawer frontal (optional)
- Rapid mounting and removal of drawer frontal
- Height, sideways and depth adjustment of the drawer incorporated in the runner fixing clips
- Bottom thickness: 16 mm
- Material: aluminium
- Sides: 90° cut end
- Finishes: White - Grey - Champagne - Stainless steel

Setting of the back and the bottom of the drawer

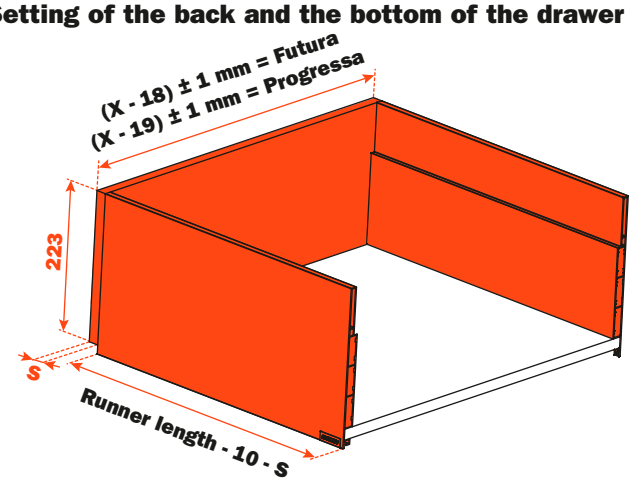

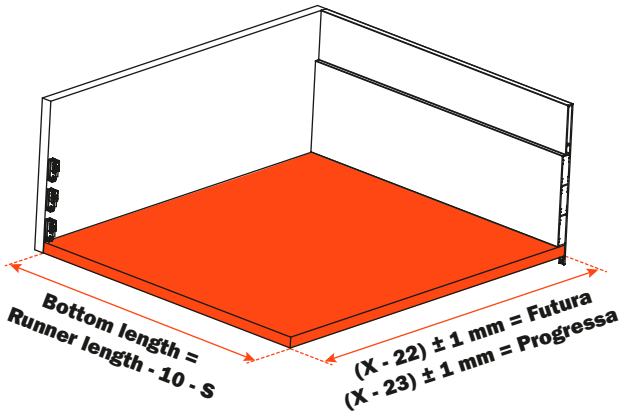

X = Internal width of the cabinet
S = Back thickness

Elements of the drawer

1	**SMGR12AGXA** Screw-on frontal and back fixing **SMGR12AGCA** Knock-in frontal and back fixing	12 pcs.
2	**AMGPXA3** Frontal and back connecting fitting	12 pcs.
3	**SCCX83H9** (Nickel-plated) **SCCX83H6** (Titanium) Cover cap with embossed logo **SCXX83H9** (Nickel-plated) Cover cap with silk-screen printed logo	2 pcs.

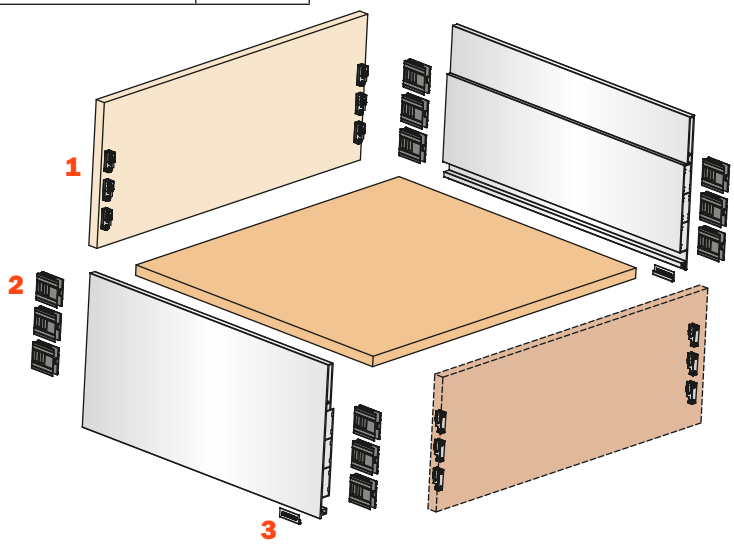

Dimensions

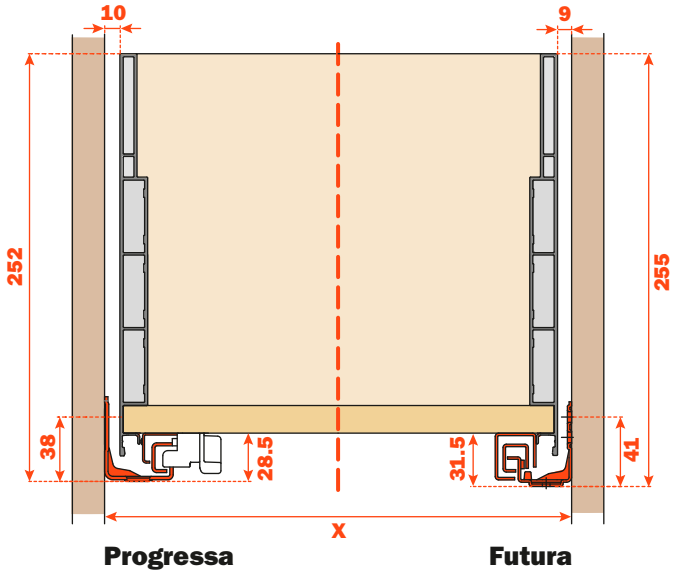

Dimensions of the metal side

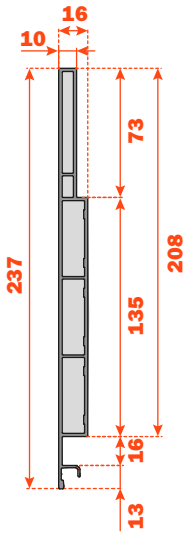

Frontal drilling

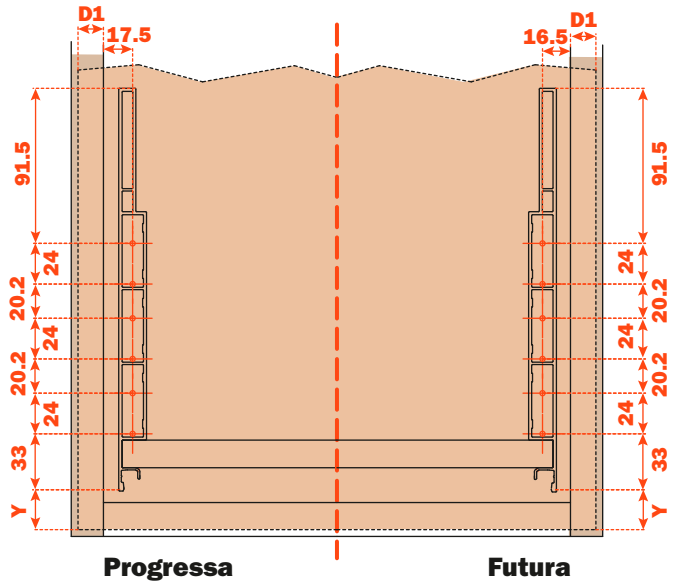

D1 = Frontal overlay on side of the cabinet

Y = Distance from the lower edge of the frontal to the Lineabox Easy side

The drilling of the frontal can be done using the **AGDLXA6 template**.

Back drilling

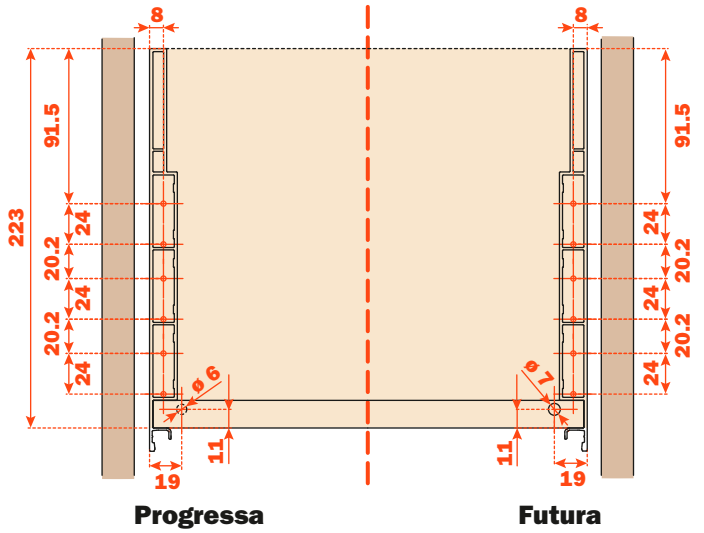

Lineabox Easy - 2-Sided - H 75 mm

Lineabox Easy metal sides, wooden bottom and back panel.
Height of the side 75 mm - Internal height 46 mm.
For use with Progressa and Futura full-extension runners.

- Supplied in 3 metre length side profiles or cut to length
- Available with and without frontal and back premounted connecting fittings
- Available kit for the composition of a drawer including a pair of runners
- Rapid assembly system, with no machinery needed
- Available template for the drilling of the drawer frontal (optional)
- Rapid mounting and removal of drawer frontal
- Height, sideways and depth adjustment of the drawer incorporated in the runner fixing clips
- Bottom thickness: 16 mm
- Material: aluminium
- Sides: 90° cut end
- Finishes: White - Grey - Champagne - Stainless steel

Setting of the back and the bottom of the drawer

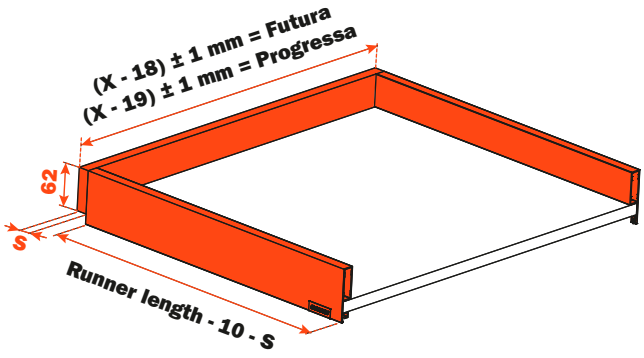

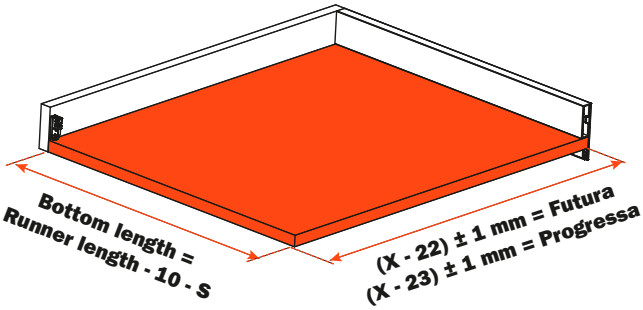

X = Internal width of the cabinet
S = Back thickness

Elements of the drawer

1	**SMGR12AGXA** Screw-on frontal and back fixing **SMGR12AGCA** Knock-in frontal and back fixing	4 pcs.
2	**AMGPXA3** Frontal and back connecting fitting	4 pcs.
3	**SCCX83H9** (Nickel-plated) **SCCX83H6** (Titanium) Cover cap with embossed logo **SCXX83H9** (Nickel-plated) Cover cap with silk-screen printed logo	2 pcs.

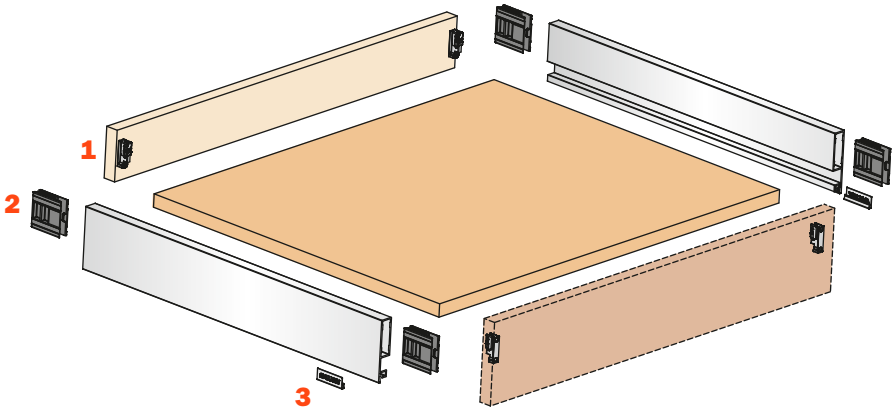

Dimensions

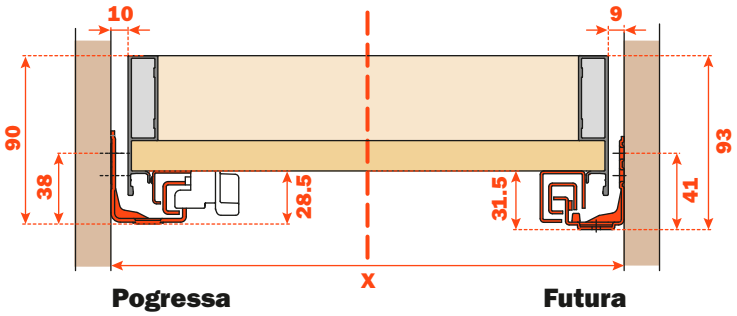

Dimensions of the metal side

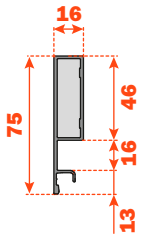

Frontal drilling

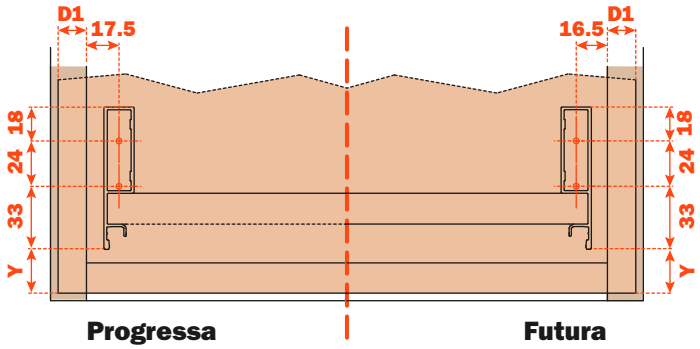

D1 = Frontal overlay on side of the cabinet

Y = Distance from the lower edge of the frontal to the Lineabox Easy side

The drilling of the frontal can be done using the **AGDLXA6 template**.

Back drilling

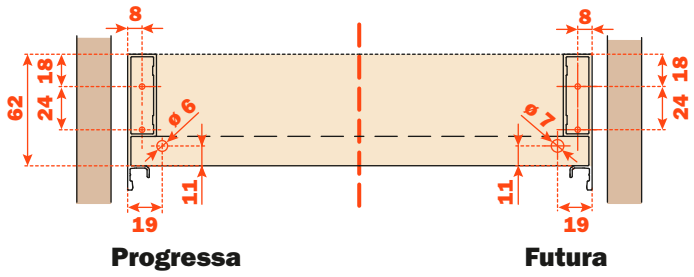

Lineabox^{Easy} - 2-Sided Under-sink drawer

Lineabox Easy - 2-Sided - Under-sink drawer - H 101 mm

Lineabox Easy metal sides, wooden bottom and back panel.
Height of the side 101 mm - Internal height 72 mm.
For use with Progressa and Futura full-extension runners.

- Supplied in 3 metre length side profiles or cut to length
- Available with and without frontal and back premounted connecting fittings
- Available kit for the composition of a drawer including a pair of runners
- Rapid assembly system, with no machinery needed
- Available template for the drilling of the drawer frontal (optional)
- Rapid mounting and removal of drawer frontal
- Height, sideways and depth adjustment of the drawer incorporated in the runner fixing clips
- Bottom thickness: 16 mm
- Material: aluminium
- Sides: 90° cut end
- Finishes: White - Grey - Champagne - Stainless steel

Setting of the back and the bottom of the drawer

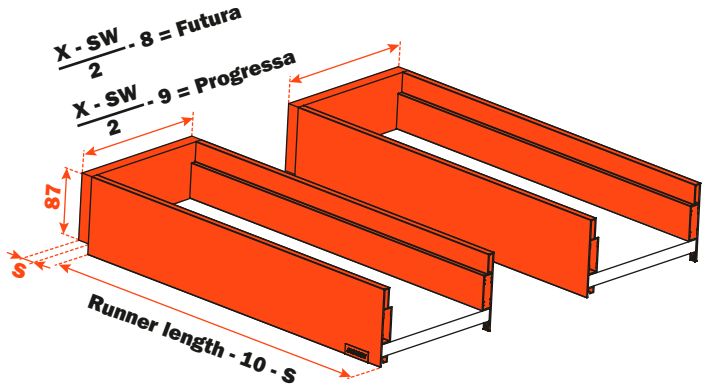

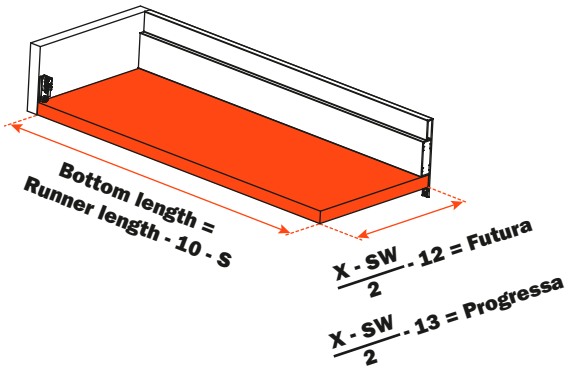

X = Internal width of the cabinet
SW = Width of the recess for under-sink
S = Back thickness

Elements of the drawer

1	**SMGR12AGXA** Screw-on frontal and back fixing **SMGR12AGCA** Knock-in frontal and back fixing	8 pcs.
2	**AMGPXA3** Frontal and back connecting fitting	8 pcs.
3	**SCCX83H9** (Nickel-plated) **SCCX83H6** (Titanium) Cover cap with embossed logo **SCXX83H9** (Nickel-plated) Cover cap with silk-screen printed logo	2 pcs.

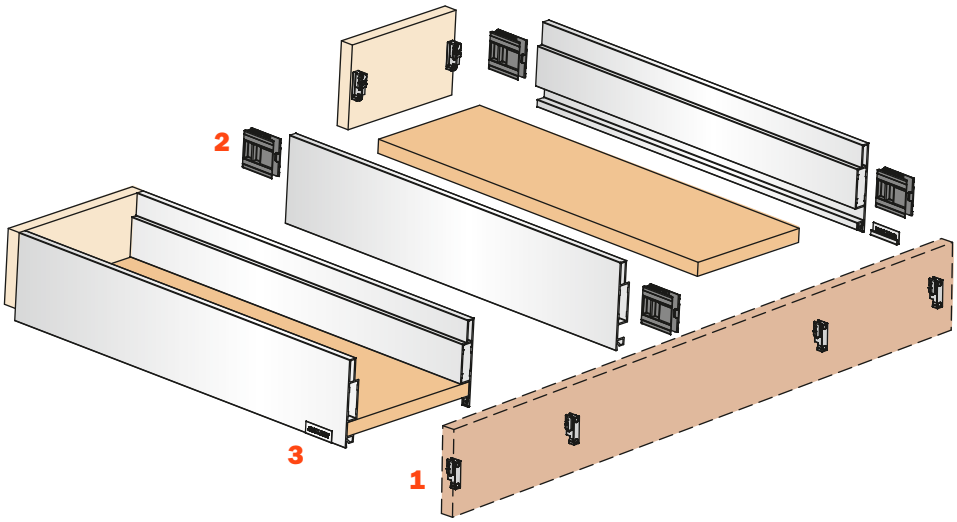

Dimensions

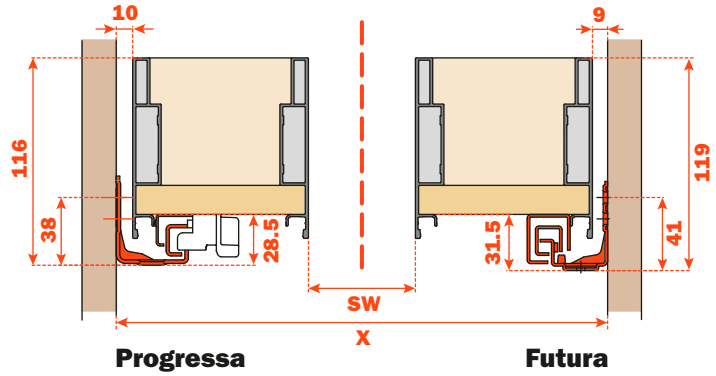

Dimensions of the metal side

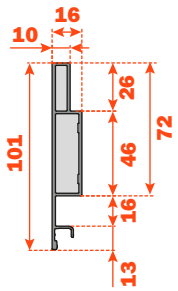

Frontal drilling

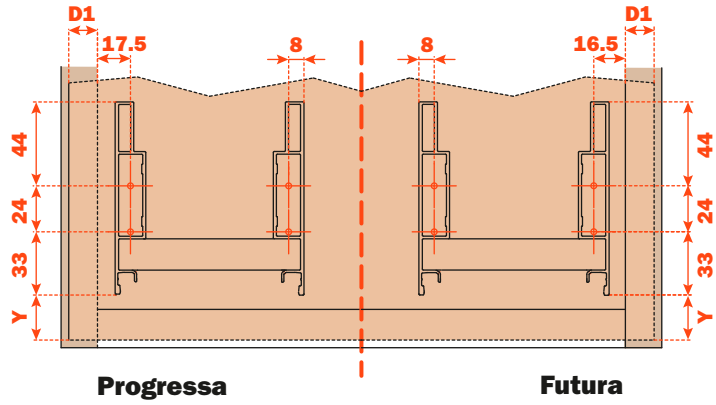

D1 = Frontal overlay on side of the cabinet

Y = Distance from the lower edge of the frontal to the Lineabox Easy side

The drilling of the frontal can be done using the **AGDLXA6 template**.

Back drilling

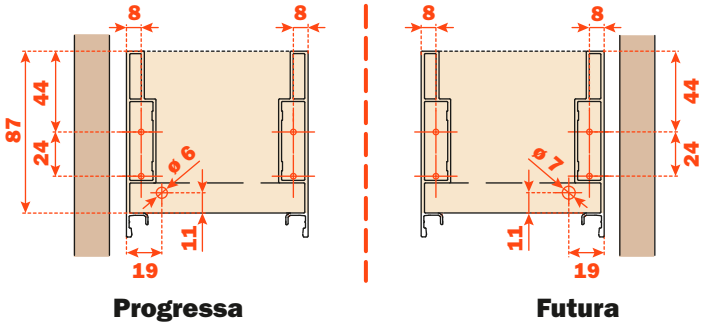

Lineabox Easy - 2-Sided - Under-sink drawer - H 178 mm

Lineabox Easy metal sides, wooden bottom and back panel.
Height of the side 178 mm - Internal height 149 mm.
For use with Progressa and Futura full-extension runners.

- Supplied in 3 metre length side profiles or cut to length
- Available with and without frontal and back premounted connecting fittings
- Available kit for the composition of a drawer including a pair of runners
- Rapid assembly system, with no machinery needed
- Available template for the drilling of the drawer frontal (optional)
- Rapid mounting and removal of drawer frontal
- Height, sideways and depth adjustment of the drawer incorporated in the runner fixing clips
- Bottom thickness: 16 mm
- Material: aluminium
- Sides: 90° cut end
- Finishes: White - Grey - Champagne - Stainless steel

Setting of the back and the bottom of the drawer

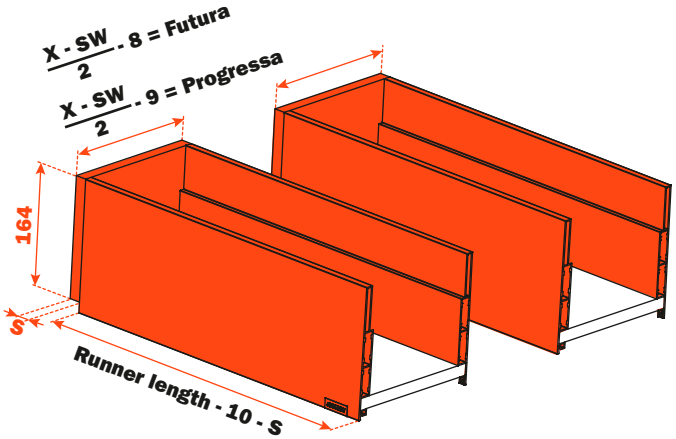

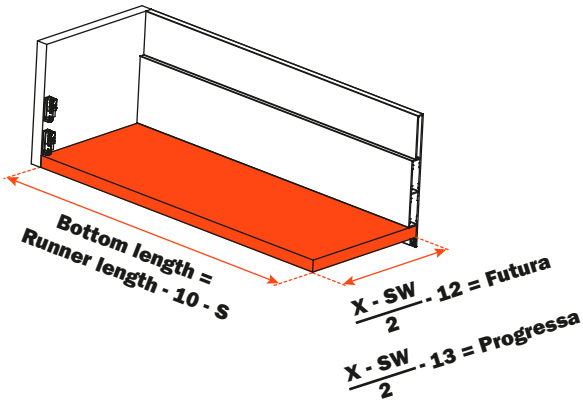

X = Internal width of the cabinet
SW = Width of the recess for under-sink
S = Back thickness

Elements of the drawer

1	**SMGR12AGXA** Screw-on frontal and back fixing **SMGR12AGCA** Knock-in frontal and back fixing	16 pcs.
2	**AMGPXA3** Frontal and back connecting fitting	16 pcs.
3	**SCCX83H9** (Nickel-plated) **SCCX83H6** (Titanium) Cover cap with embossed logo **SCXX83H9** (Nickel-plated) Cover cap with silk-screen printed logo	2 pcs.

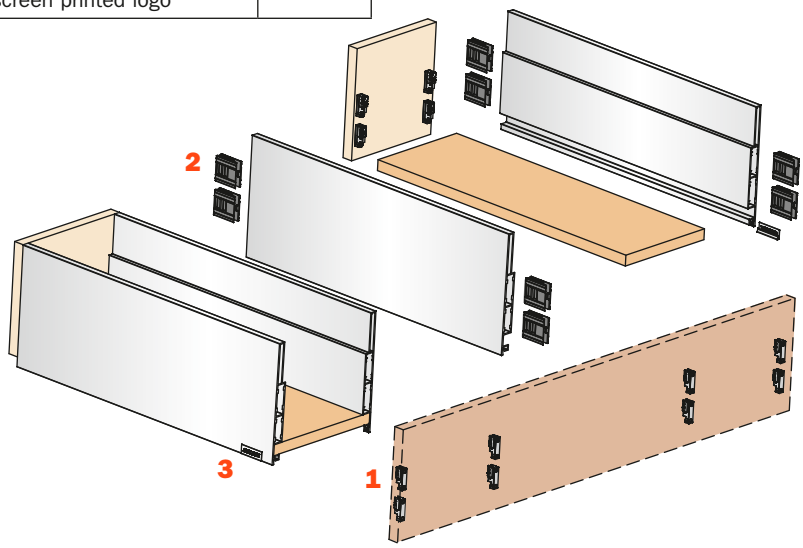

Dimensions

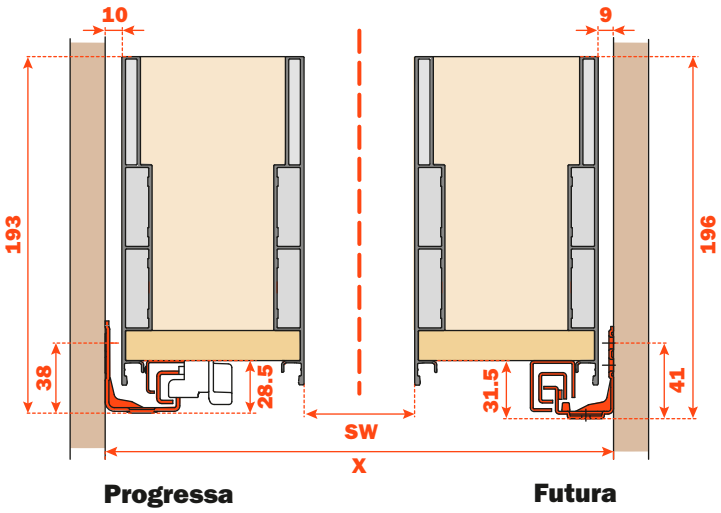

Dimensions of the metal side

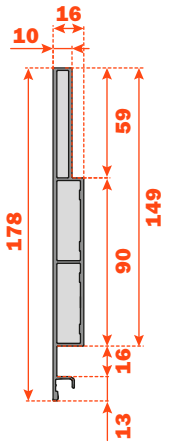

Frontal drilling

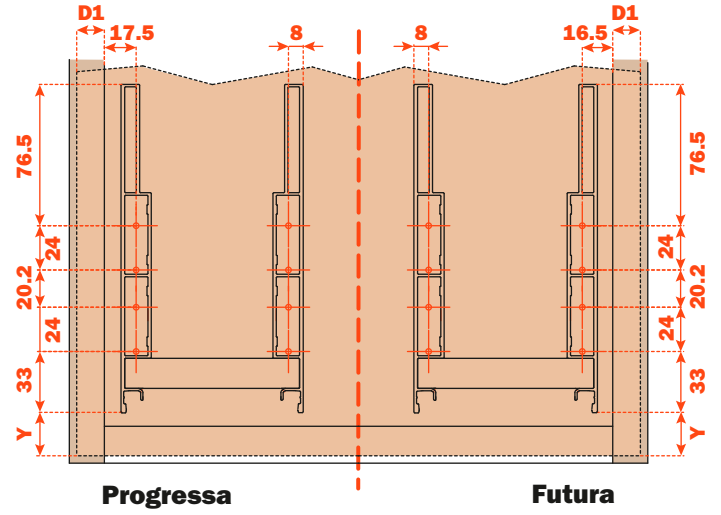

D1 = Frontal overlay on side of the cabinet

Y = Distance from the lower edge of the frontal to the Lineabox Easy side

The drilling of the frontal can be done using the **AGDLXA6 template**.

Back drilling

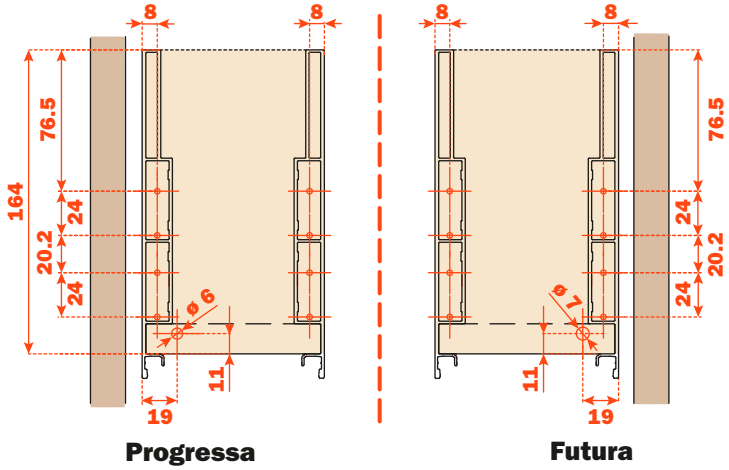

Lineabox Easy - 2-Sided - Under-sink drawer - H 237 mm

Lineabox Easy metal sides, wooden bottom and back panel.
Height of the side 237 mm - Internal height 208 mm.
For use with Progressa and Futura full-extension runners.

- Supplied in 3 metre length side profiles or cut to length
- Available with and without frontal and back premounted connecting fittings
- Available kit for the composition of a drawer including a pair of runners
- Rapid assembly system, with no machinery needed
- Available template for the drilling of the drawer frontal (optional)
- Rapid mounting and removal of drawer frontal
- Height, sideways and depth adjustment of the drawer incorporated in the runner fixing clips
- Bottom thickness: 16 mm
- Material: aluminium
- Sides: 90° cut end
- Finishes: White - Grey - Champagne - Stainless steel

Setting of the back and the bottom of the drawer

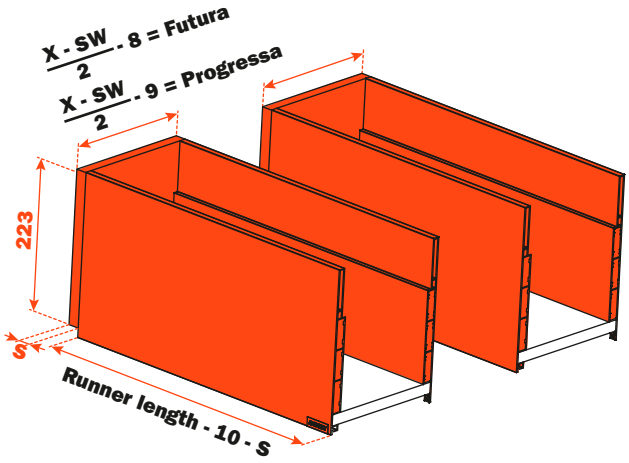

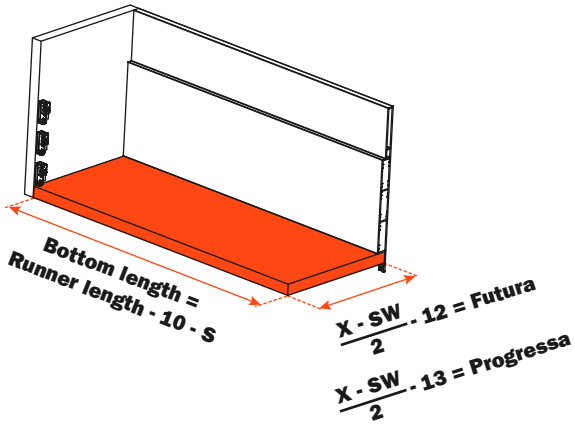

X = Internal width of the cabinet
SW = Width of the recess for under-sink
S = Back thickness

Elements of the drawer

1	**SMGR12AGXA** Screw-on frontal and back fixing **SMGR12AGCA** Knock-in frontal and back fixing	24 pcs.
2	**AMGPXA3** Frontal and back connecting fitting	24 pcs.
3	**SCCX83H9** (Nickel-plated) **SCCX83H6** (Titanium) Cover cap with embossed logo **SCXX83H9** (Nickel-plated) Cover cap with silk-screen printed logo	2 pcs.

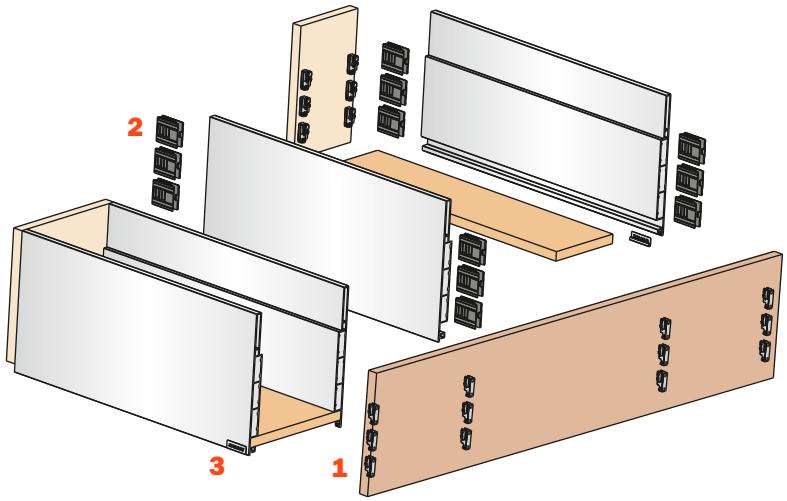

Dimensions

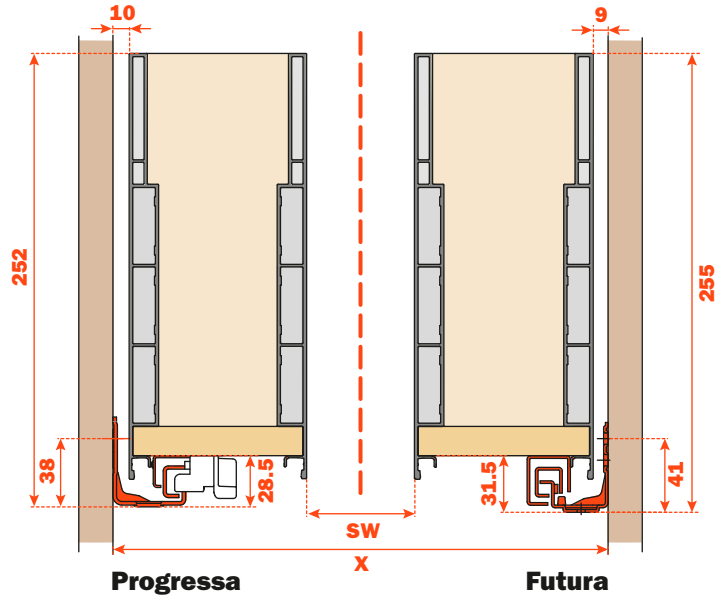

Dimensions of the metal side

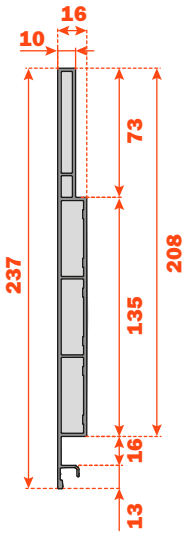

Frontal drilling

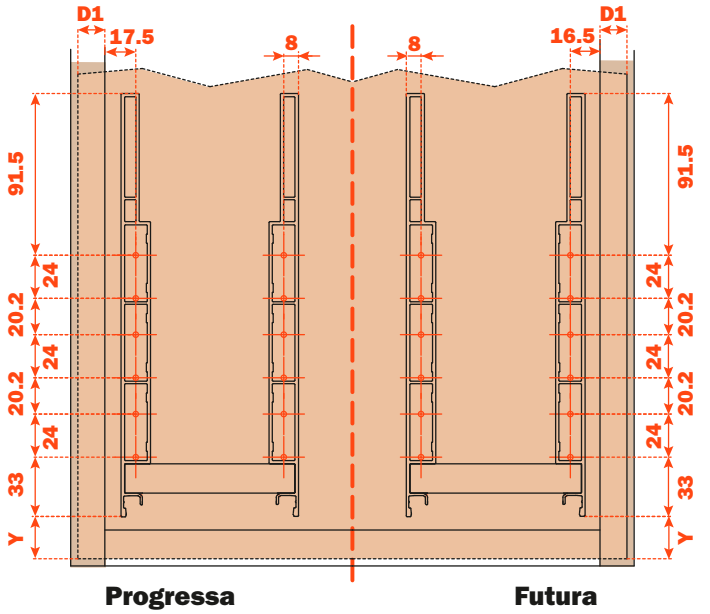

D1 = Frontal overlay on side of the cabinet

Y = Distance from the lower edge of the frontal to the Lineabox Easy side

The drilling of the frontal can be done using the **AGDLXA6 template**.

Back drilling

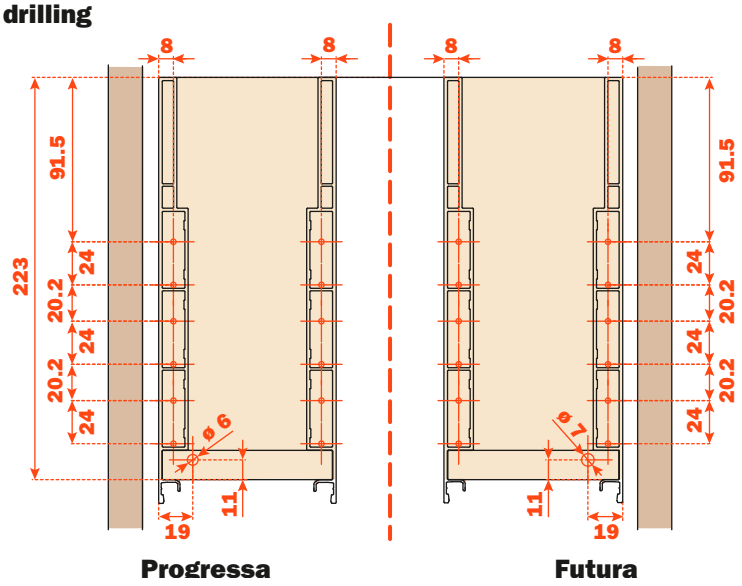

Lineabox Easy - 2-Sided - Under-sink drawer - H 75 mm

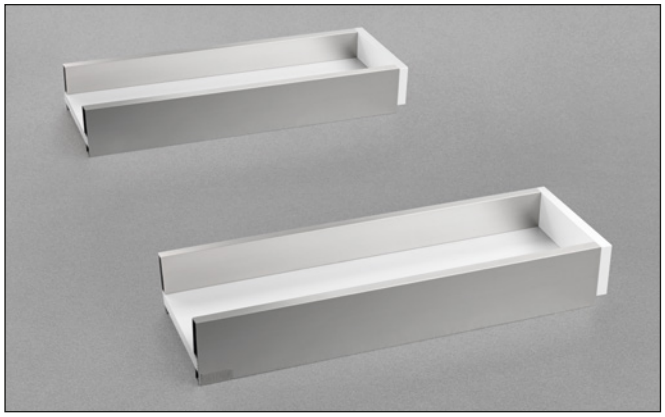

Lineabox Easy metal sides, wooden bottom and back panel.
Height of the side 75 mm - Internal height 46 mm.
For use with Progressa and Futura full-extension runners.

- Supplied in 3 metre length side profiles or cut to length
- Available with and without frontal and back premounted connecting fittings
- Available kit for the composition of a drawer including a pair of runners
- Rapid assembly system, with no machinery needed
- Available template for the drilling of the drawer frontal (optional)
- Rapid mounting and removal of drawer frontal
- Height, sideways and depth adjustment of the drawer incorporated in the runner fixing clips
- Bottom thickness: 16 mm
- Material: aluminium
- Sides: 90° cut end
- Finishes: White - Grey - Champagne - Stainless steel

Setting of the back and the bottom of the drawer

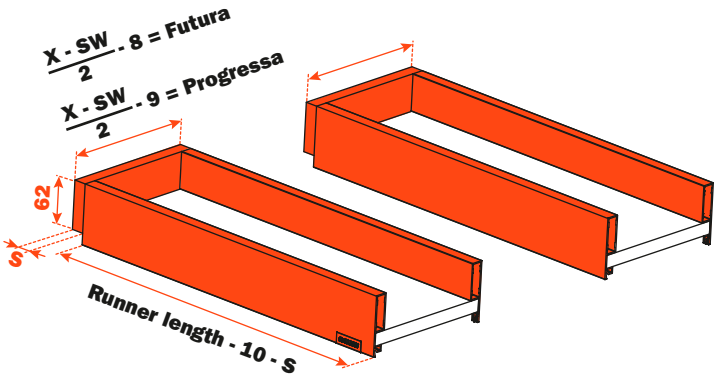

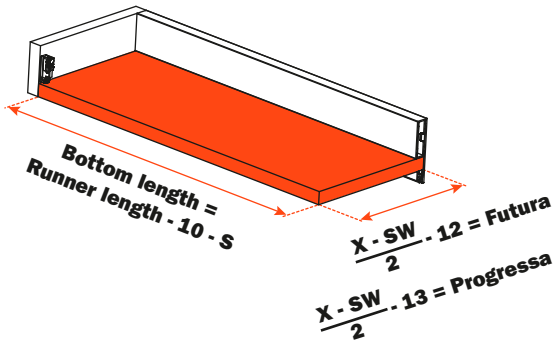

X = Internal width of the cabinet
SW = Width of the recess for under-sink
S = Back thickness

Elements of the drawer

1	**SMGR12AGXA** Screw-on frontal and back fixing **SMGR12AGCA** Knock-in frontal and back fixing	8 pcs.
2	**AMGPXA3** Frontal and back connecting fitting	8 pcs.
3	**SCCX83H9** (Nickel-plated) **SCCX83H6** (Titanium) Cover cap with embossed logo **SCXX83H9** (Nickel-plated) Cover cap with silk-screen printed logo	2 pcs.

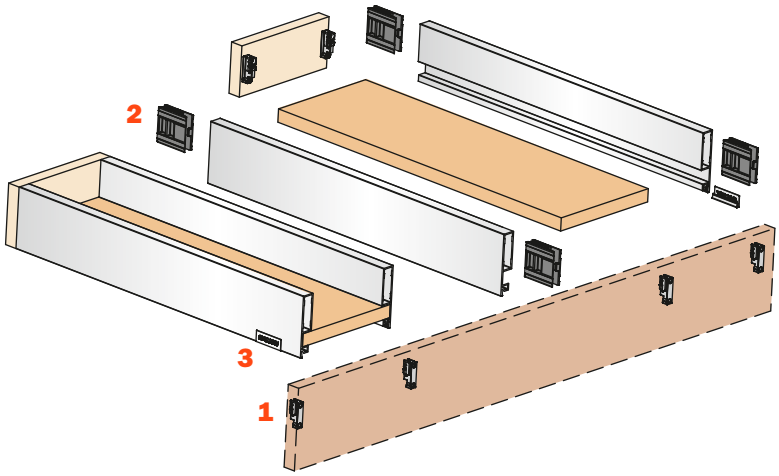

Dimensions

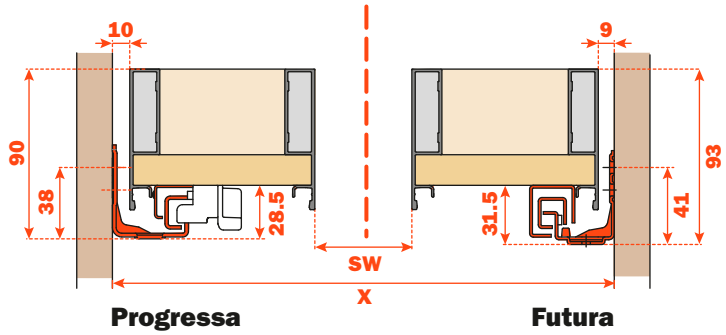

Dimensions of the metal side

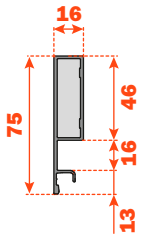

Frontal drilling

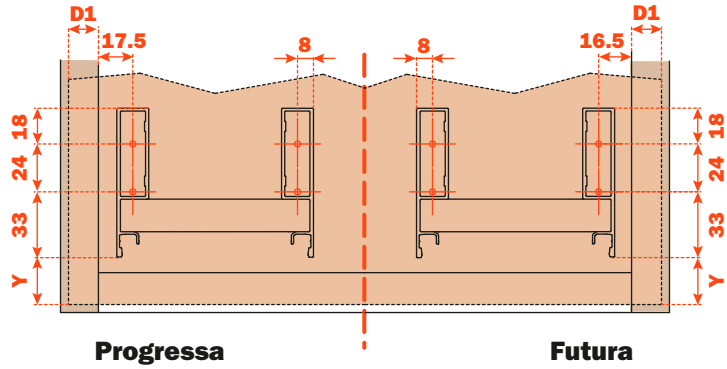

D1 = Frontal overlay on side of the cabinet

Y = Distance from the lower edge of the frontal to the Lineabox Easy side

The drilling of the frontal can be done using the **AGDLXA6 template**.

Back drilling

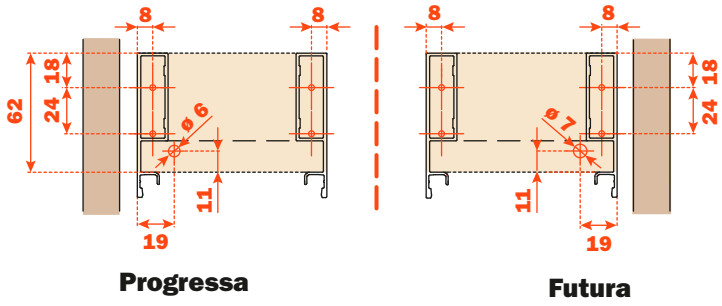

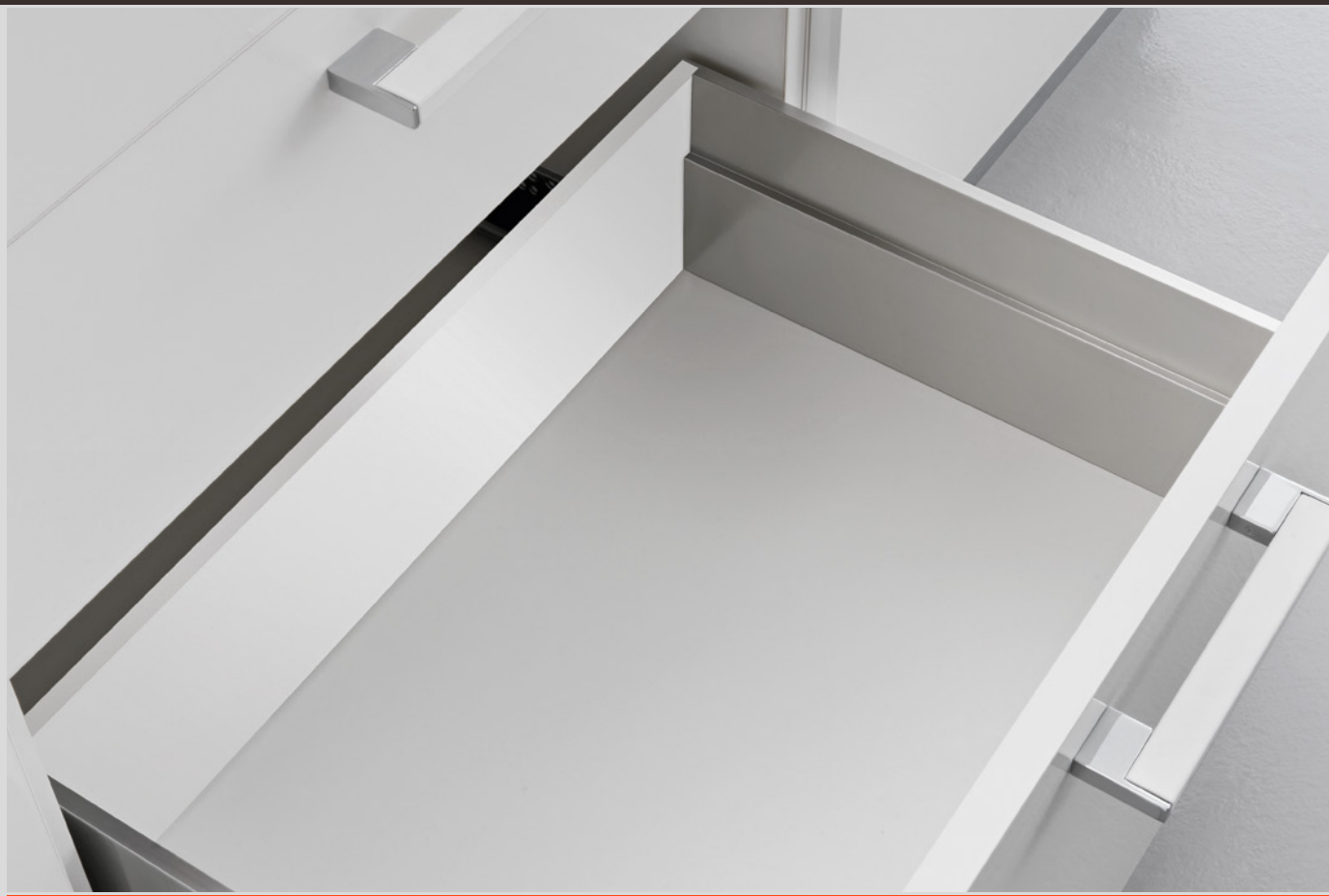

Lineabox^{Easy} - 2-Sided Inset Back

Lineabox Easy - 2-Sided - Inset Back - H 101 mm

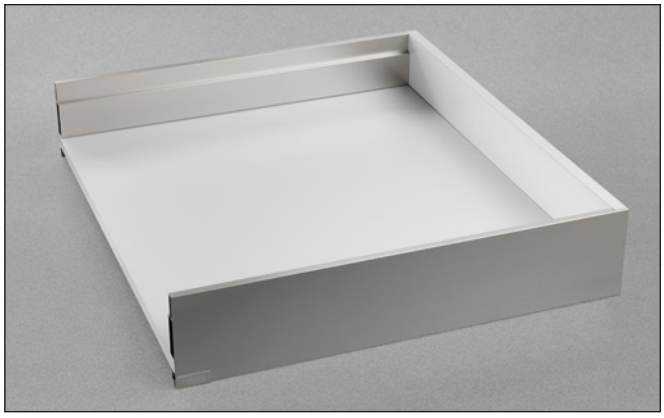

Lineabox Easy metal sides, wooden bottom and back panel.
Height of the side 101 mm - Internal height 72 mm.
For use with Progressa and Futura full-extension runners.

- Lineabox Easy sides cut to length and worked to hide the wooden back panel, further enhancing the product
- Available with and without frontal and back premounted connecting fittings
- Available kit for the composition of a drawer including a pair of runners
- Rapid assembly system, with no machinery needed
- Available template for the drilling of the drawer frontal (optional)
- Rapid mounting and removal of drawer frontal
- Height, sideways and depth adjustment of the drawer incorporated in the runner fixing clips
- Back and bottom thickness: 16 mm
- Material: Aluminium
- Sides: 90° cut end
- Finishes: White - Grey - Champagne - Stainless steel

Setting of the back and the bottom of the drawer

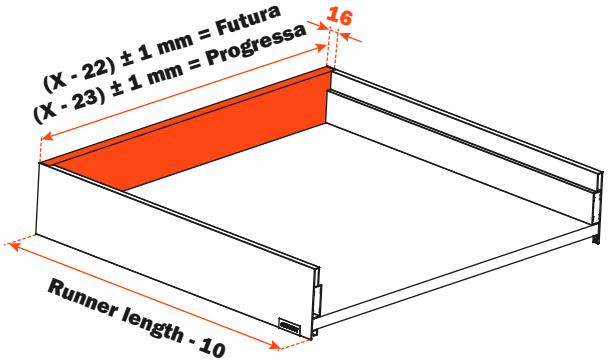

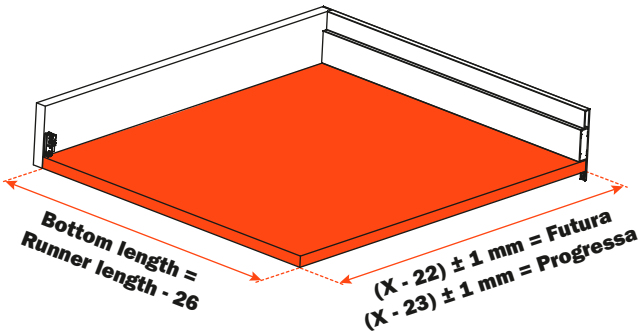

X = Internal width of the cabinet

Elements of the drawer

1	**SMGR12AGXA** Screw-on frontal and back fixing **SMGR12AGCA** Knock-in frontal and back fixing	4 pcs.
2	**AMGPXA3** Frontal and back connecting fitting	4 pcs.
3	**SCCX83H9** (Nickel-plated) **SCCX83H6** (Titanium) Cover cap with embossed logo **SCXX83H9** (Nickel-plated) Cover cap with silk-screen printed logo	2 pcs.

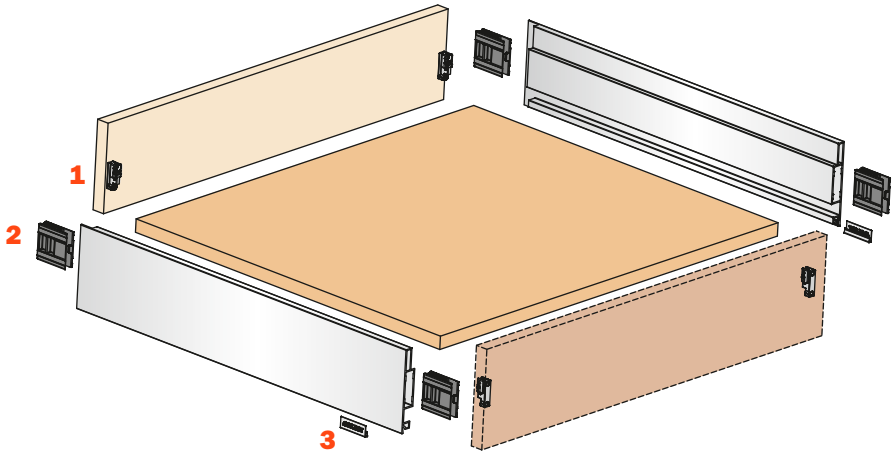

Dimensions

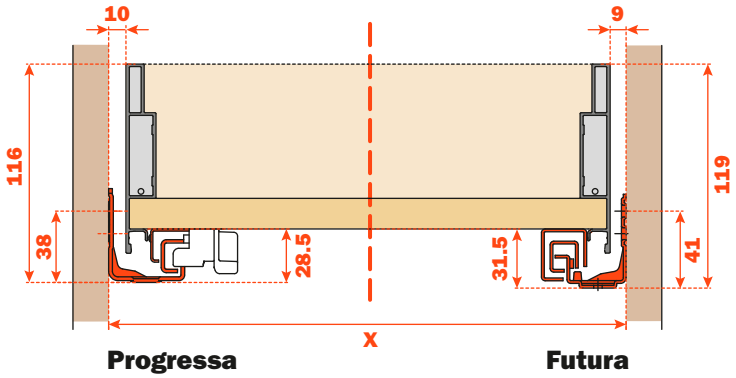

Dimensions of the metal side

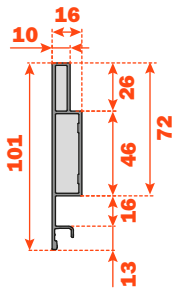

Frontal drilling

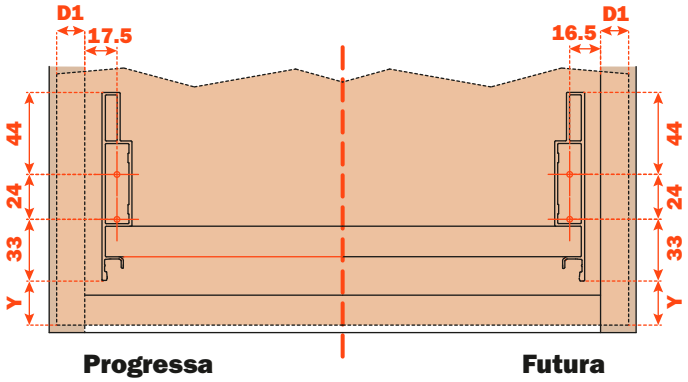

D1 = Frontal overlay on side of the cabinet

Y = Distance from the lower edge of the frontal to the Lineabox Easy side

The drilling of the frontal can be done using the **AGDLXA6 template**.

Back drilling

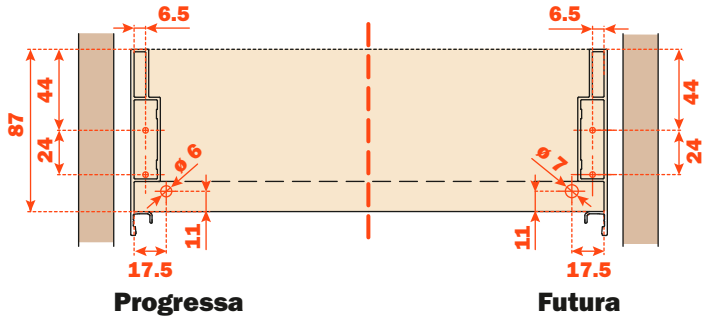

Lineabox Easy - 2-Sided - Inset Back - H 178 mm

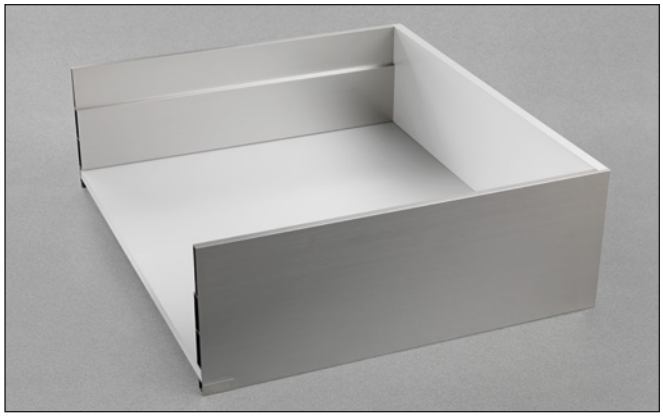

Lineabox Easy metal sides, wooden bottom and back panel.
Height of the side 178 mm - Internal height 149 mm.
For use with Progressa and Futura full-extension runners.

- Lineabox Easy sides cut to length and worked to hide the wooden back panel, further enhancing the product
- Available with and without frontal and back premounted connecting fittings
- Available kit for the composition of a drawer including a pair of runners
- Rapid assembly system, with no machinery needed
- Available template for the drilling of the drawer frontal (optional)
- Rapid mounting and removal of drawer frontal
- Height, sideways and depth adjustment of the drawer incorporated in the runner fixing clips
- Back and bottom thickness: 16 mm
- Material: Aluminium
- Sides: 90° cut end
- Finishes: White - Grey - Champagne - Stainless steel

Setting of the back and the bottom of the drawer

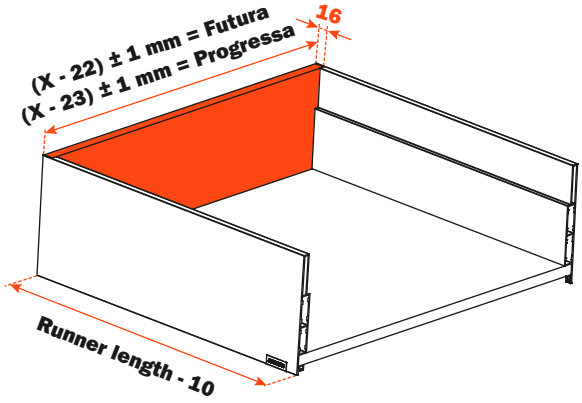

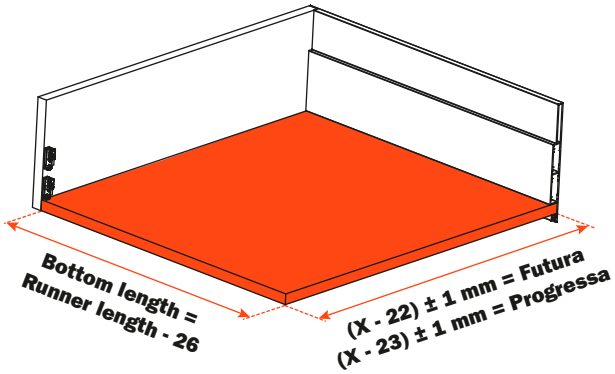

X = Internal width of the cabinet

Elements of the drawer

1	**SMGR12AGXA** Screw-on frontal and back fixing **SMGR12AGCA** Knock-in frontal and back fixing	8 pcs.
2	**AMGPXA3** Frontal and back connecting fitting	8 pcs.
3	**SCCX83H9** (Nickel-plated) **SCCX83H6** (Titanium) Cover cap with embossed logo **SCXX83H9** (Nickel-plated) Cover cap with silk-screen printed logo	2 pcs.

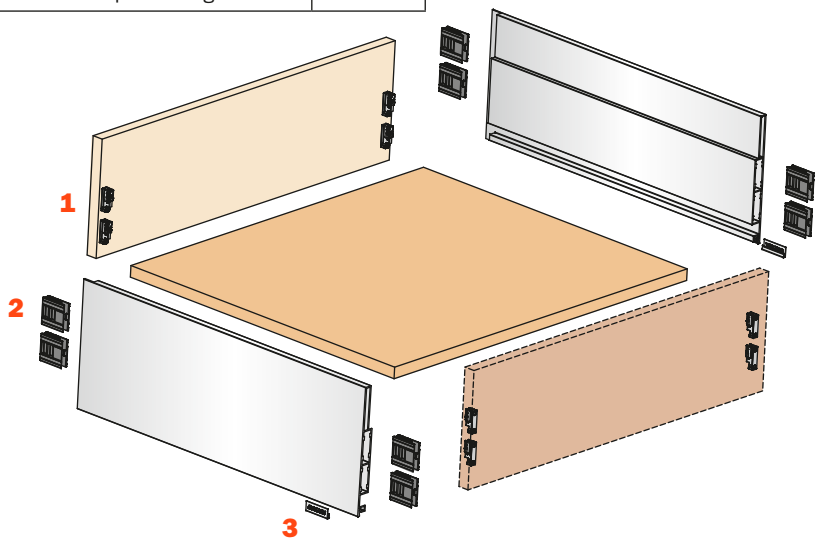

Dimensions

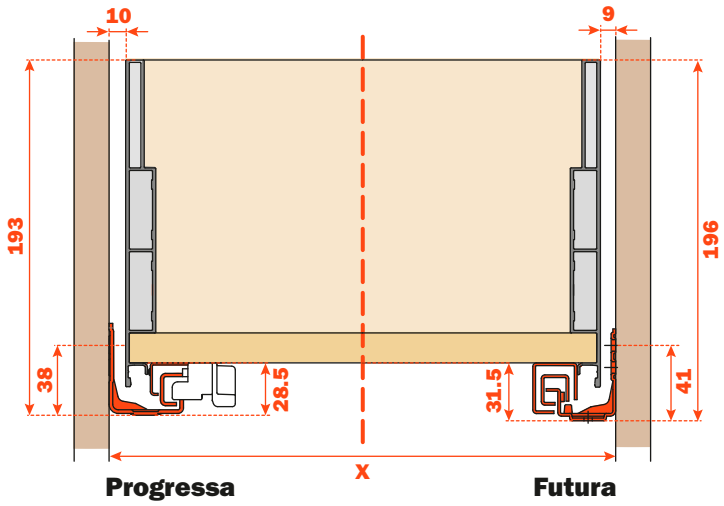

Dimensions of the metal side

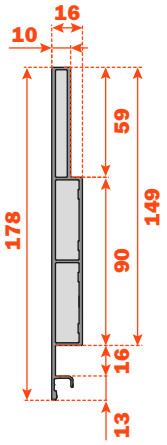

Frontal drilling

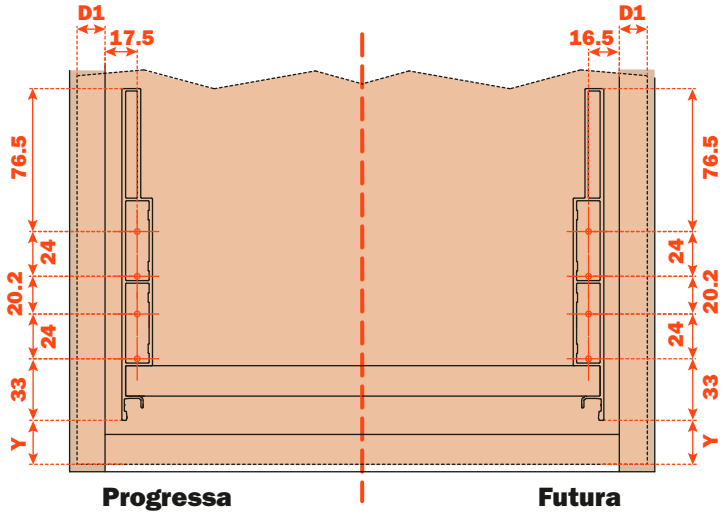

D1 = Frontal overlay on side of the cabinet

Y = Distance from the lower edge of the frontal to the Lineabox Easy side

The drilling of the frontal can be done using the **AGDLXA6 template**.

Back drilling

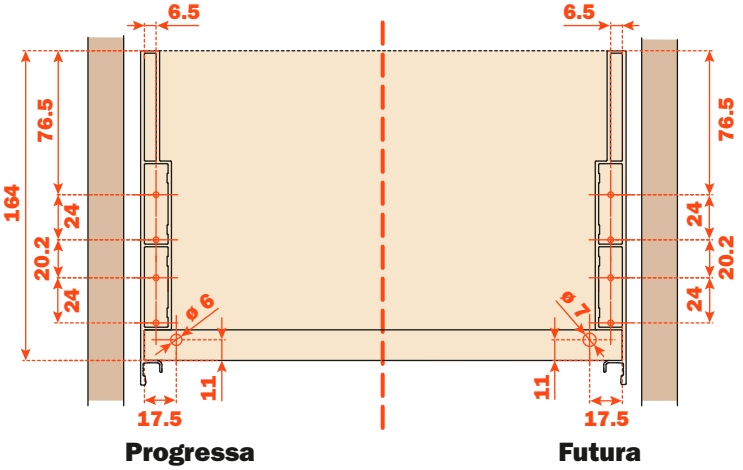

Lineabox Easy - 2-Sided - Inset Back - H 237 mm

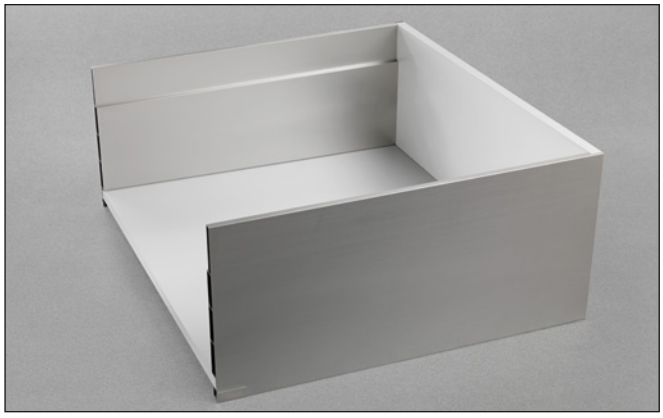

Lineabox Easy metal sides, wooden bottom and back panel.
Height of the side 237 mm - Internal height 208 mm.
For use with Progressa and Futura full-extension runners.

- Lineabox Easy sides cut to length and worked to hide the wooden back panel, further enhancing the product
- Available with and without frontal and back premounted connecting fittings
- Available kit for the composition of a drawer including a pair of runners
- Rapid assembly system, with no machinery needed
- Available template for the drilling of the drawer frontal (optional)
- Rapid mounting and removal of drawer frontal
- Height, sideways and depth adjustment of the drawer incorporated in the runner fixing clips
- Back and bottom thickness: 16 mm
- Material: Aluminium
- Sides: 90° cut end
- Finishes: White - Grey - Champagne - Stainless steel

Setting of the back and the bottom of the drawer

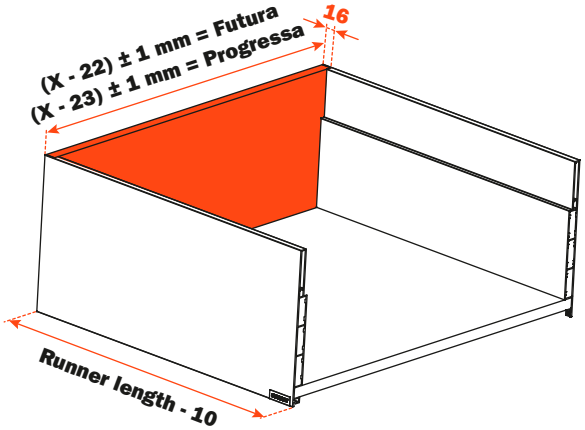

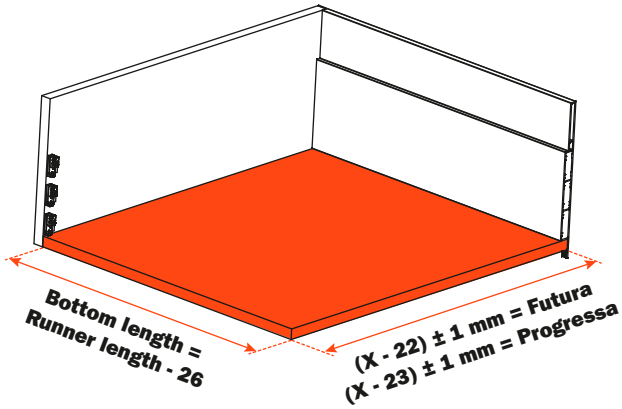

X = Internal width of the cabinet

Elements of the drawer

1	**SMGR12AGXA** Screw-on frontal and back fixing **SMGR12AGCA** Knock-in frontal and back fixing	12 pcs.
2	**AMGPXA3** Frontal and back connecting fitting	12 pcs.
3	**SCCX83H9** (Nickel-plated) **SCCX83H6** (Titanium) Cover cap with embossed logo **SCXX83H9** (Nickel-plated) Cover cap with silk-screen printed logo	2 pcs.

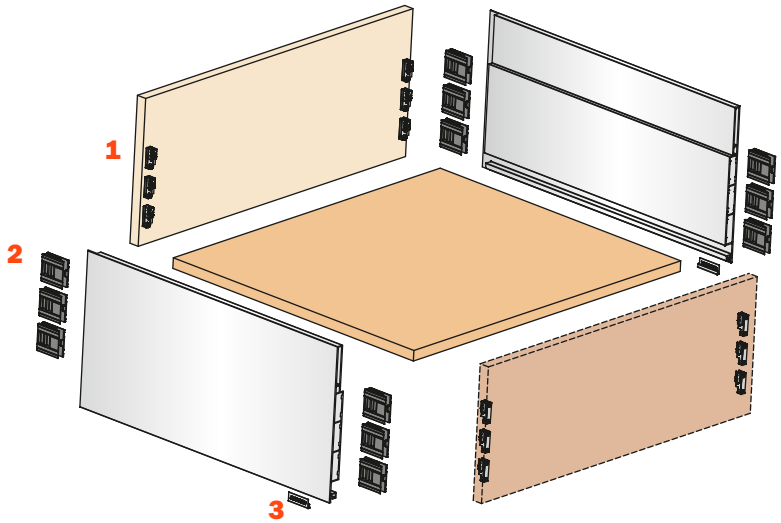

Dimensions

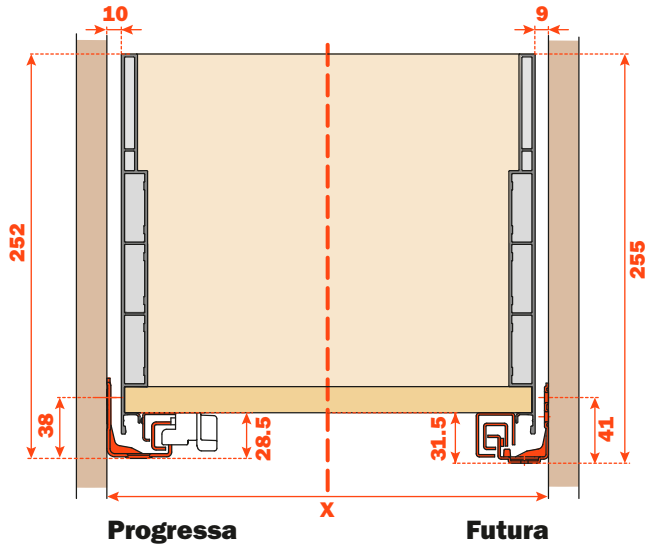

Dimensions of the metal side

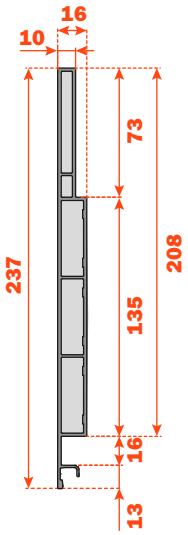

Frontal drilling

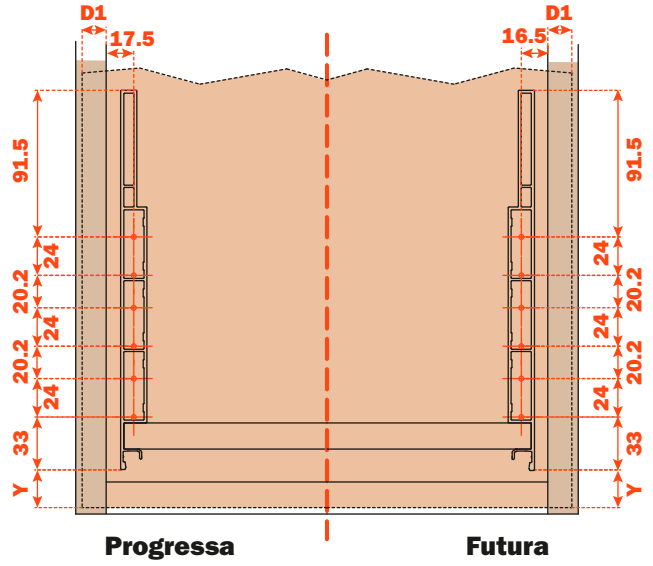

D1 = Frontal overlay on side of the cabinet

Y = Distance from the lower edge of the frontal to the Lineabox Easy side

The drilling of the frontal can be done using the **AGDLXA6 template**.

Back drilling

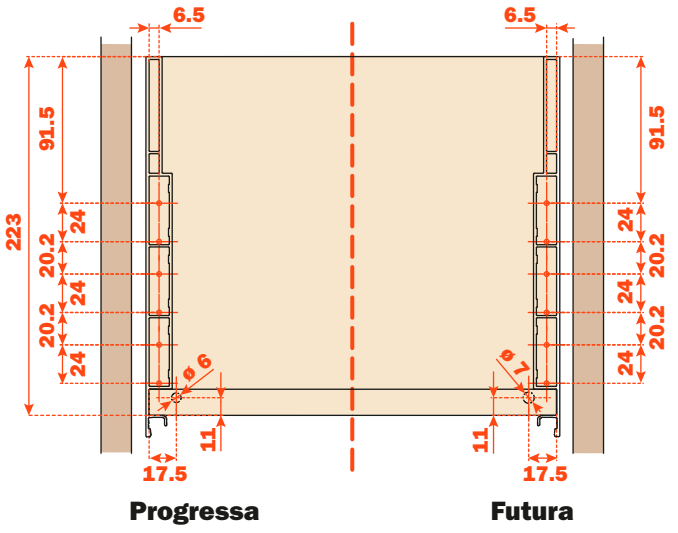

Lineabox Easy - 2-Sided - Inset Back - H 75 mm

Lineabox Easy metal sides, wooden bottom and back panel.
Height of the side 75 mm - Internal height 46 mm.
For use with Progressa and Futura full-extension runners.

- Lineabox Easy sides cut to length and worked to hide the wooden back panel, further enhancing the product
- Available with and without frontal and back premounted connecting fittings
- Available kit for the composition of a drawer including a pair of runners
- Rapid assembly system, with no machinery needed
- Available template for the drilling of the drawer frontal (optional)
- Rapid mounting and removal of drawer frontal
- Height, sideways and depth adjustment of the drawer incorporated in the runner fixing clips
- Back and bottom thickness: 16 mm
- Material: Aluminium
- Sides: 90° cut end
- Finishes: White - Grey - Champagne - Stainless steel

Setting of the back and the bottom of the drawer

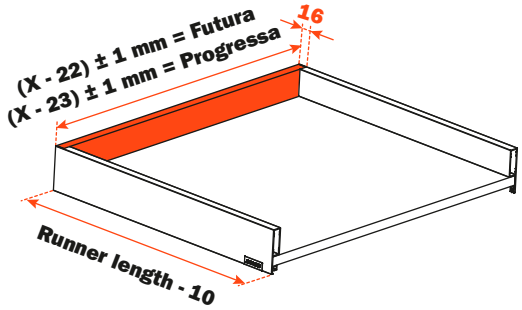

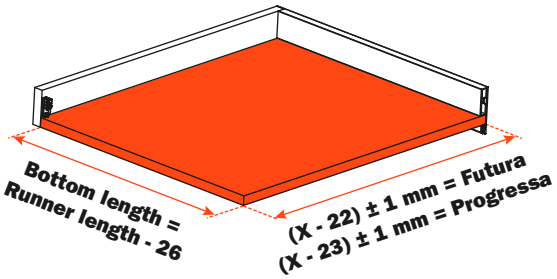

X = Internal width of the cabinet

Elements of the drawer

1	**SMGR12AGXA** Screw-on frontal and back fixing **SMGR12AGCA** Knock-in frontal and back fixing	4 pcs.
2	**AMGPXA3** Frontal and back connecting fitting	4 pcs.
3	**SCCX83H9** (Nickel-plated) **SCCX83H6** (Titanium) Cover cap with embossed logo **SCXX83H9** (Nickel-plated) Cover cap with silk-screen printed logo	2 pcs.

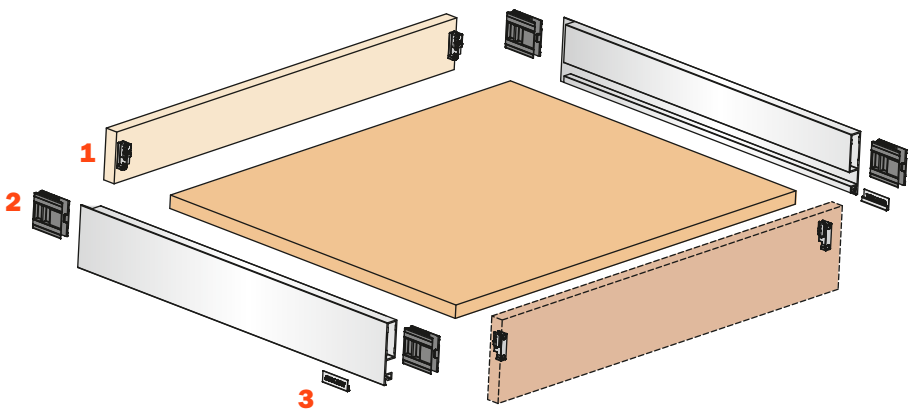

Dimensions

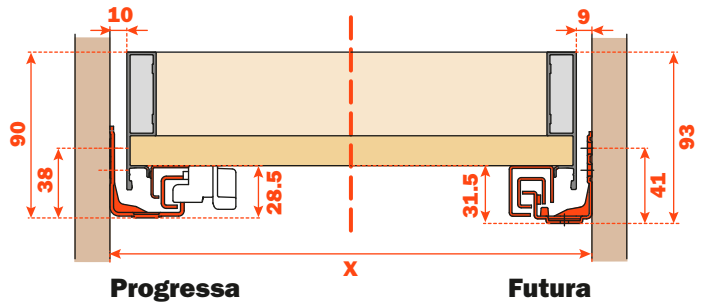

Dimensions of the metal side

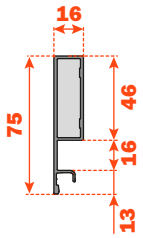

Frontal drilling

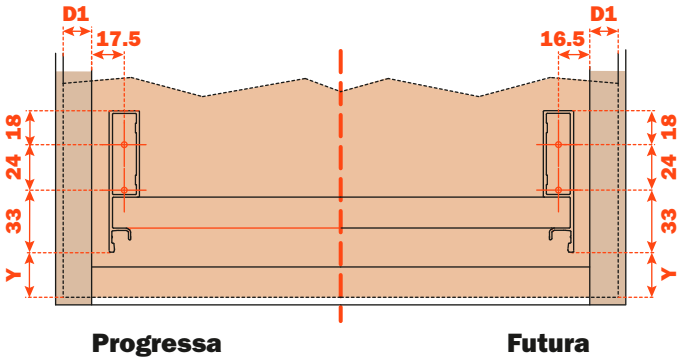

D1 = Frontal overlay on side of the cabinet

Y = Distance from the lower edge of the frontal to the Lineabox Easy side

The drilling of the frontal can be done using the **AGDLXA6 template**.

Back drilling

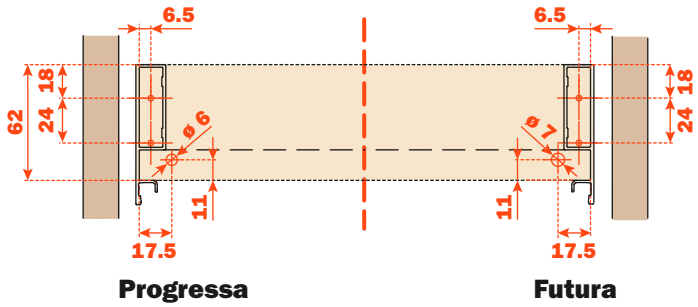

Lineabox^{Easy} - 2-Sided Under-sink drawer Inset Back

Lineabox Easy - 2-Sided - Under-sink drawer - Inset Back - H 101 mm

Lineabox Easy metal sides, wooden bottom and back panel.
Height of the side 101 mm - Internal height 72 mm.
For use with Progressa and Futura full-extension runners.

- Lineabox Easy sides cut to length and worked to hide the wooden back panel, further enhancing the product
- Available with and without frontal and back premounted connecting fittings
- Available kit for the composition of a drawer including a pair of runners
- Rapid assembly system, with no machinery needed
- Available template for the drilling of the drawer frontal (optional)
- Rapid mounting and removal of drawer frontal
- Height, sideways and depth adjustment of the drawer incorporated in the runner fixing clips
- Back and bottom thickness: 16 mm
- Material: Aluminium
- Sides: 90° cut end
- Finishes: White - Grey - Champagne - Stainless steel

Setting of the back and the bottom of the drawer

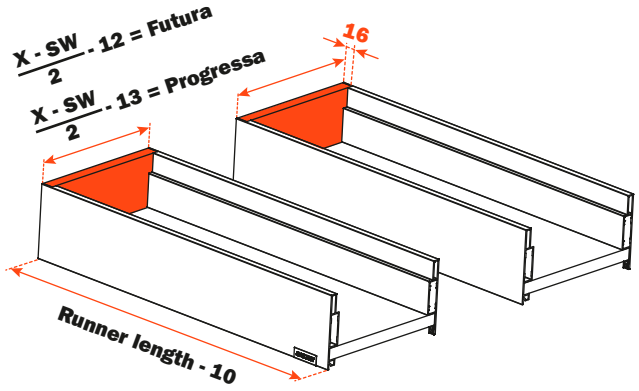

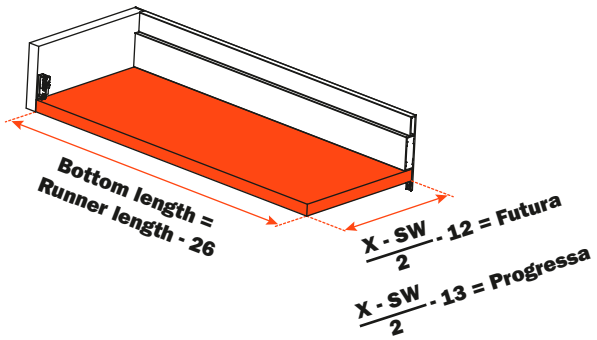

X = Internal width of the cabinet
SW = Width of the recess for under-sink

Elements of the drawer

1	**SMGR12AGXA** Screw-on frontal and back fixing **SMGR12AGCA** Knock-in frontal and back fixing	8 pcs.
2	**AMGPXA3** Frontal and back connecting fitting	8 pcs.
3	**SCCX83H9** (Nickel-plated) **SCCX83H6** (Titanium) Cover cap with embossed logo **SCXX83H9** (Nickel-plated) Cover cap with silk-screen printed logo	2 pcs.

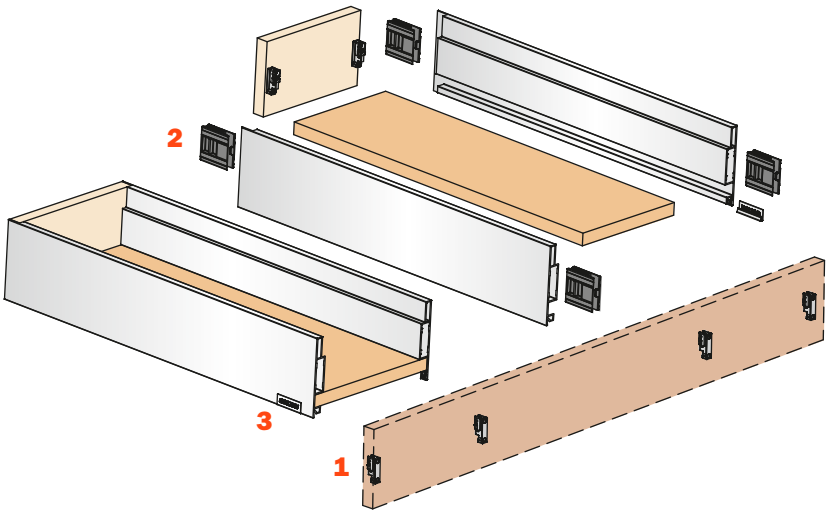

Dimensions

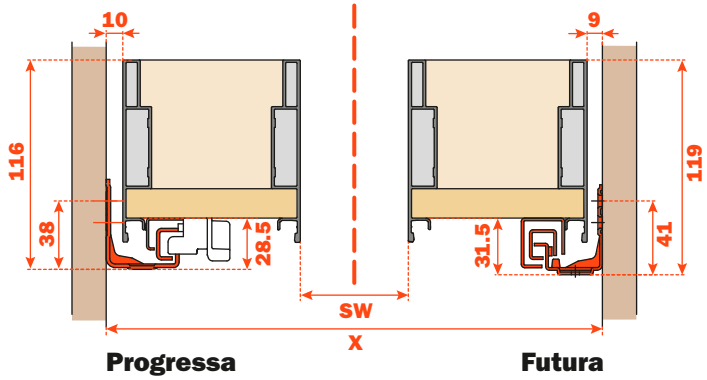

Dimensions of the metal side

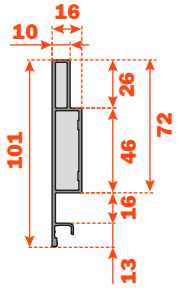

Frontal drilling

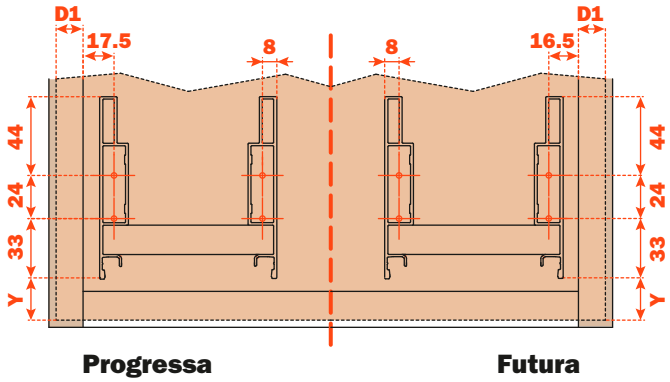

D1 = Frontal overlay on side of the cabinet

Y = Distance from the lower edge of the frontal to the Lineabox Easy side

The drilling of the frontal can be done using the **AGDLXA6 template**.

Back drilling

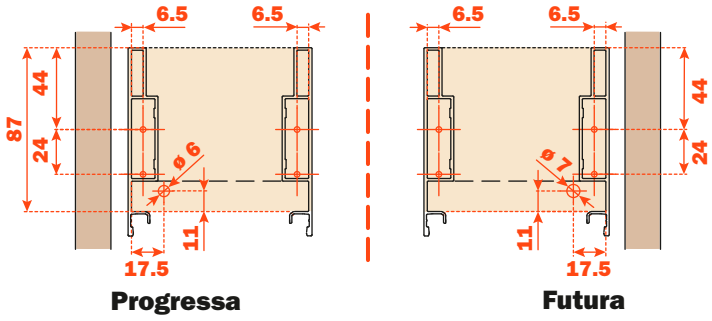

Lineabox Easy - 2-Sided - Under-sink drawer - Inset Back - H 178 mm

Lineabox Easy metal sides, wooden bottom and back panel.
Height of the side 178 mm - Internal height 149 mm.
For use with Progressa and Futura full-extension runners.

- Lineabox Easy sides cut to length and worked to hide the wooden back panel, further enhancing the product
- Available with and without frontal and back premounted connecting fittings
- Available kit for the composition of a drawer including a pair of runners
- Rapid assembly system, with no machinery needed
- Available template for the drilling of the drawer frontal (optional)
- Rapid mounting and removal of drawer frontal
- Height, sideways and depth adjustment of the drawer incorporated in the runner fixing clips
- Back and bottom thickness: 16 mm
- Material: Aluminium
- Sides: 90° cut end
- Finishes: White - Grey - Champagne - Stainless steel

Setting of the back and the bottom of the drawer

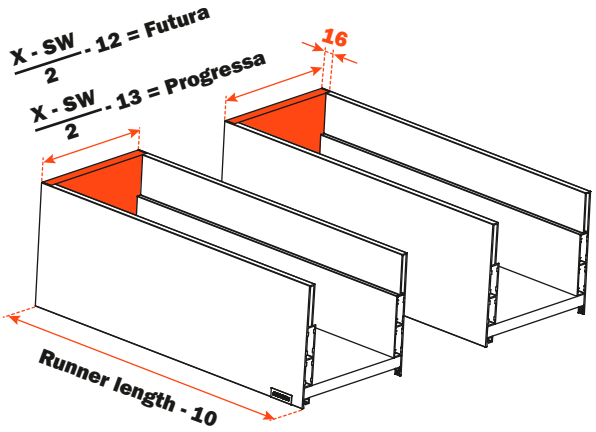

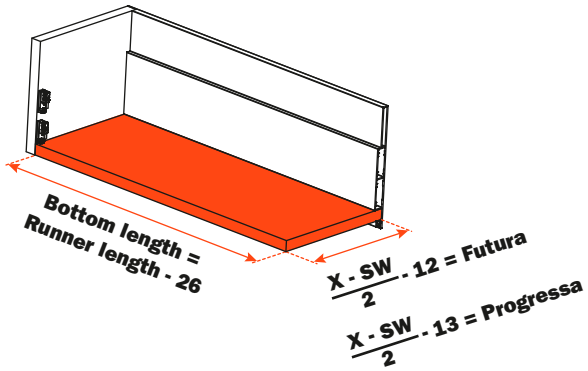

X = Internal width of the cabinet
SW = Width of the recess for under-sink

Elements of the drawer

1	**SMGR12AGXA** Screw-on frontal and back fixing **SMGR12AGCA** Knock-in frontal and back fixing	16 pcs.
2	**AMGPXA3** Frontal and back connecting fitting	16 pcs.
3	**SCCX83H9** (Nickel-plated) **SCCX83H6** (Titanium) Cover cap with embossed logo **SCXX83H9** (Nickel-plated) Cover cap with silk-screen printed logo	2 pcs.

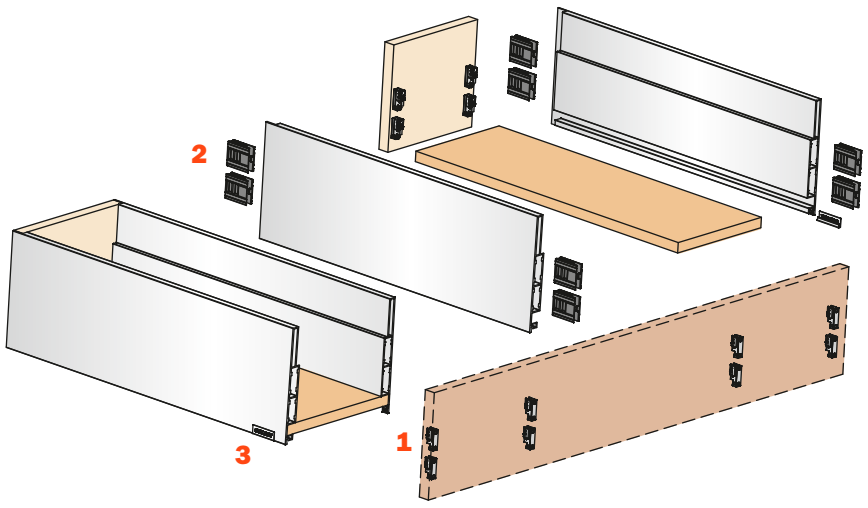

Dimensions

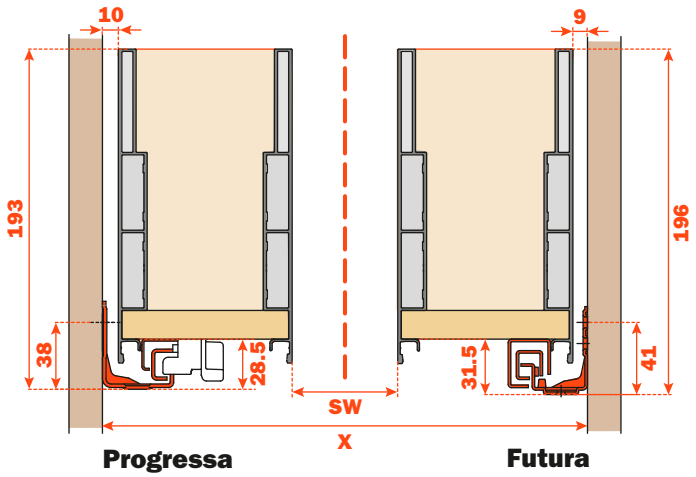

Dimensions of the metal side

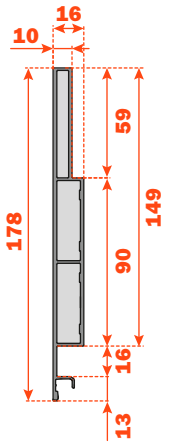

Frontal drilling

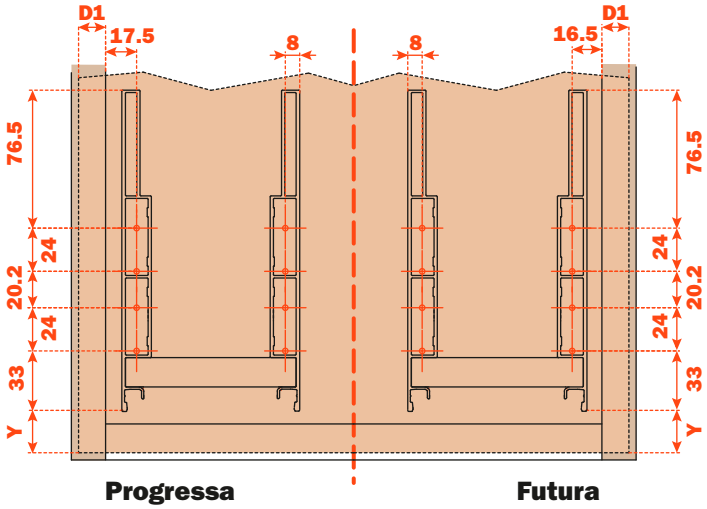

D1 = Frontal overlay on side of the cabinet

Y = Distance from the lower edge of the frontal to the Lineabox Easy side

The drilling of the frontal can be done using the **AGDLXA6 template**.

Back drilling

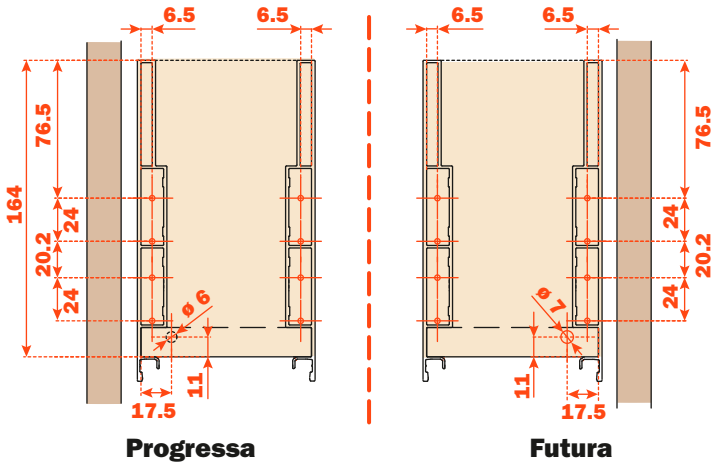

Lineabox Easy - 2-Sided - Under-sink drawer - Inset Back - H 237 mm

Lineabox Easy metal sides, wooden bottom and back panel.
Height of the side 237 mm - Internal height 208 mm.
For use with Progressa and Futura full-extension runners.

- Lineabox Easy sides cut to length and worked to hide the wooden back panel, further enhancing the product
- Available with and without frontal and back premounted connecting fittings
- Available kit for the composition of a drawer including a pair of runners
- Rapid assembly system, with no machinery needed
- Available template for the drilling of the drawer frontal (optional)
- Rapid mounting and removal of drawer frontal
- Height, sideways and depth adjustment of the drawer incorporated in the runner fixing clips
- Back and bottom thickness: 16 mm
- Material: Aluminium
- Sides: 90° cut end
- Finishes: White - Grey - Champagne - Stainless steel

Setting of the back and the bottom of the drawer

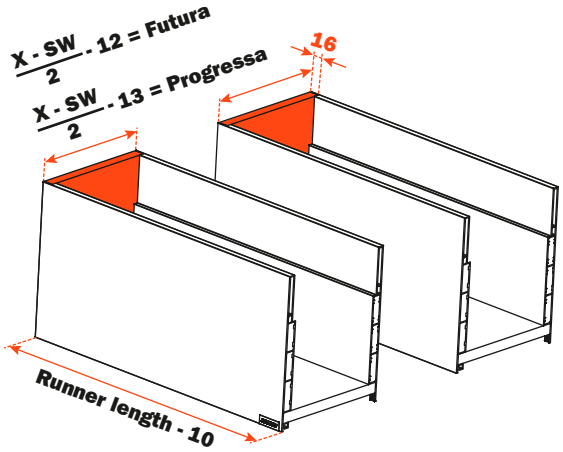

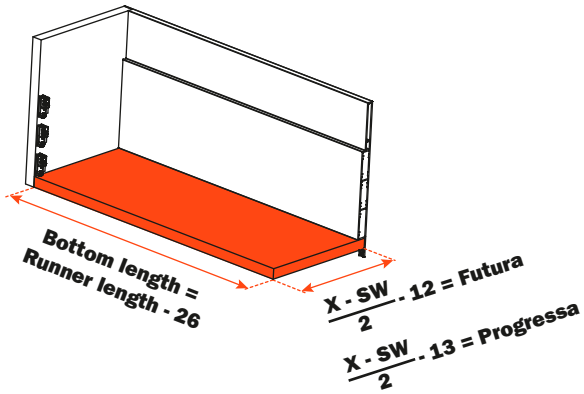

X = Internal width of the cabinet
SW = Width of the recess for under-sink

Elements of the drawer

1	**SMGR12AGXA** Screw-on frontal and back fixing **SMGR12AGCA** Knock-in frontal and back fixing	24 pcs.
2	**AMGPXA3** Frontal and back connecting fitting	24 pcs.
3	**SCCX83H9** (Nickel-plated) **SCCX83H6** (Titanium) Cover cap with embossed logo **SCXX83H9** (Nickel-plated) Cover cap with silk-screen printed logo	2 pcs.

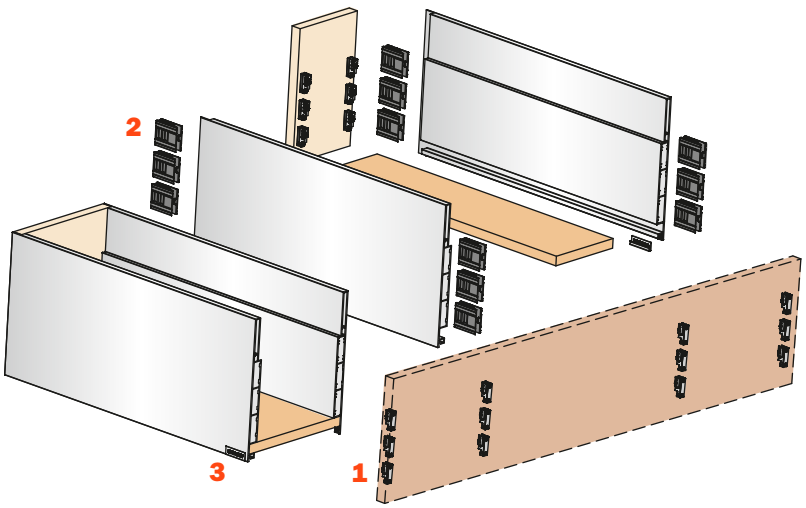

Dimensions

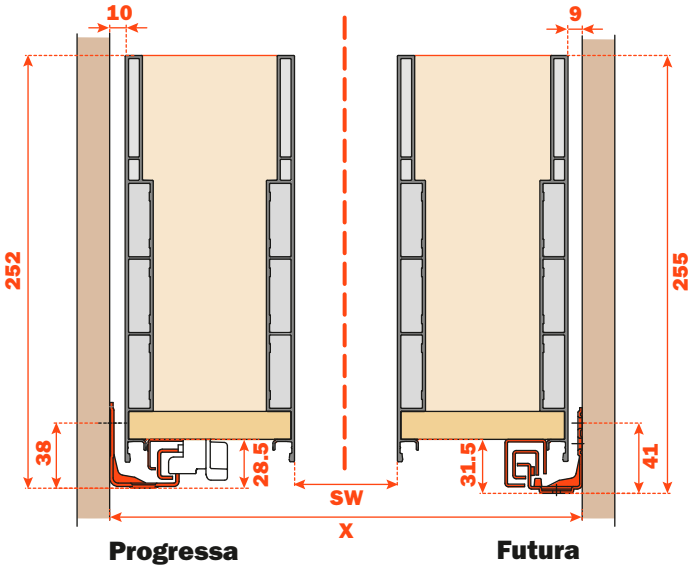

Dimensions of the metal side

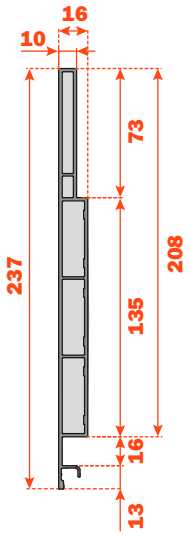

Frontal drilling

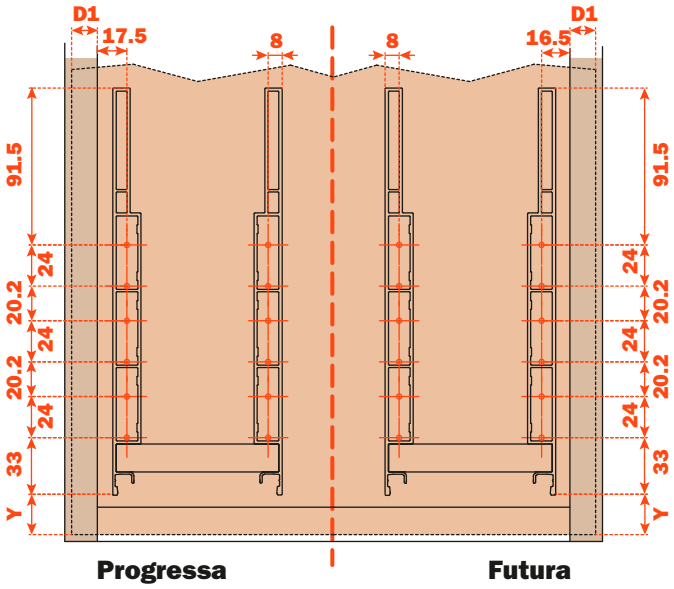

D1 = Frontal overlay on side of the cabinet

Y = Distance from the lower edge of the frontal to the Lineabox Easy side

The drilling of the frontal can be done using the **AGDLXA6 template**.

Back drilling

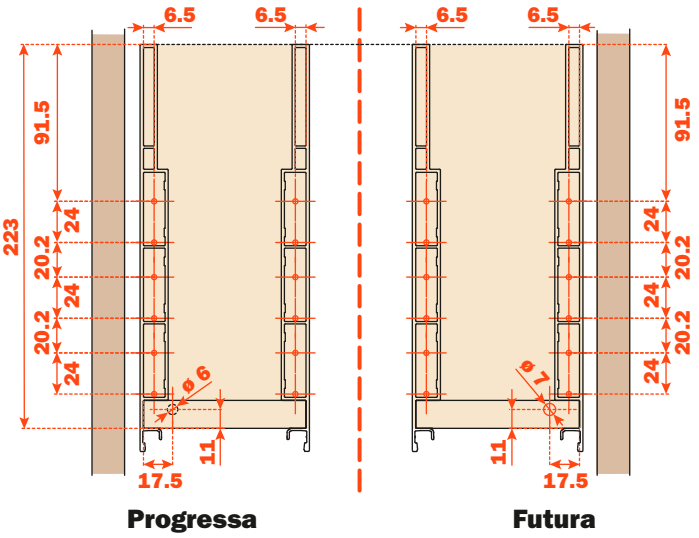

Lineabox Easy - 2-Sided - Under-sink drawer - Inset Back - H 75 mm

Lineabox Easy metal sides, wooden bottom and back panel.
Height of the side 75 mm - Internal height 46 mm.
For use with Progressa and Futura full-extension runners.

- Lineabox Easy sides cut to length and worked to hide the wooden back panel, further enhancing the product
- Available with and without frontal and back premounted connecting fittings
- Available kit for the composition of a drawer including a pair of runners
- Rapid assembly system, with no machinery needed
- Available template for the drilling of the drawer frontal (optional)
- Rapid mounting and removal of drawer frontal
- Height, sideways and depth adjustment of the drawer incorporated in the runner fixing clips
- Back and bottom thickness: 16 mm
- Material: Aluminium
- Sides: 90° cut end
- Finishes: White - Grey - Champagne - Stainless steel

Setting of the back and the bottom of the drawer

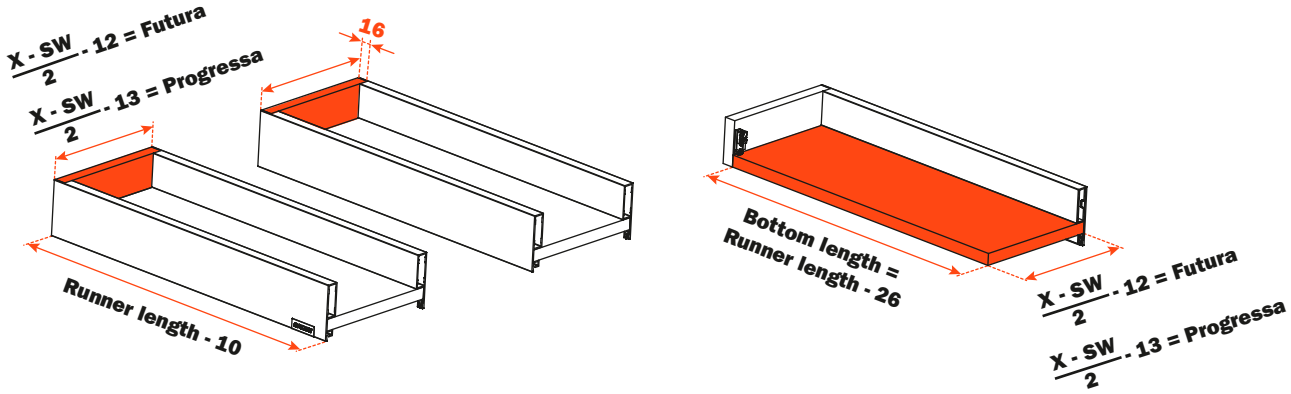

X = Internal width of the cabinet
SW = Width of the recess for under-sink

Elements of the drawer

1	**SMGR12AGXA** Screw-on frontal and back fixing **SMGR12AGCA** Knock-in frontal and back fixing	8 pcs.
2	**AMGPXA3** Frontal and back connecting fitting	8 pcs.
3	**SCCX83H9** (Nickel-plated) **SCCX83H6** (Titanium) Cover cap with embossed logo **SCXX83H9** (Nickel-plated) Cover cap with silk-screen printed logo	2 pcs.

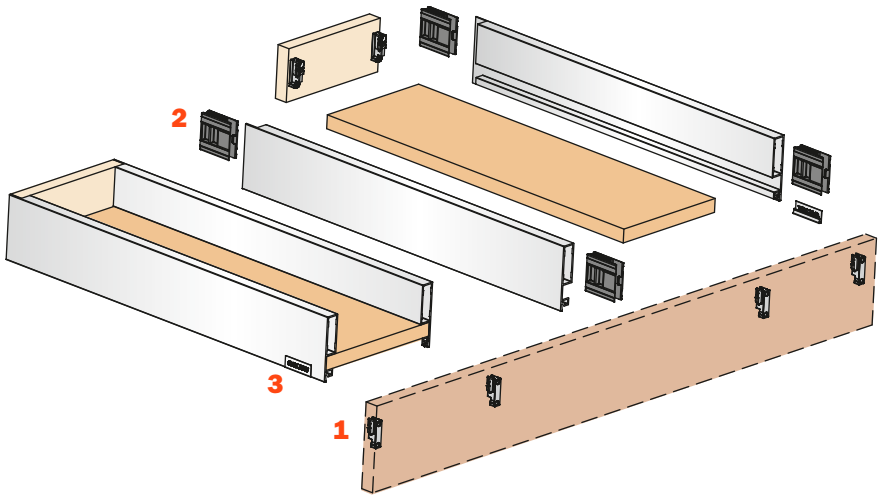

Dimensions

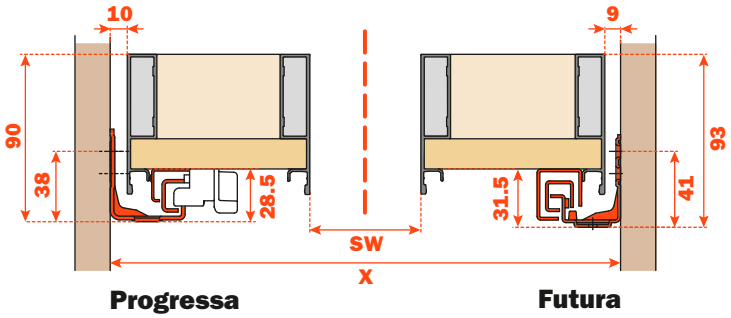

Dimensions of the metal side

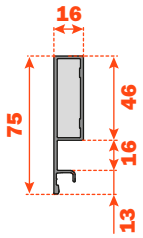

Frontal drilling

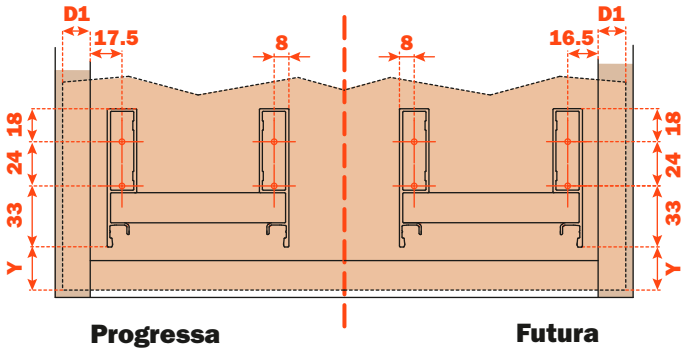

D1 = Frontal overlay on side of the cabinet

Y = Distance from the lower edge of the frontal to the Lineabox Easy side

The drilling of the frontal can be done using the **AGDLXA6 template**.

Back drilling

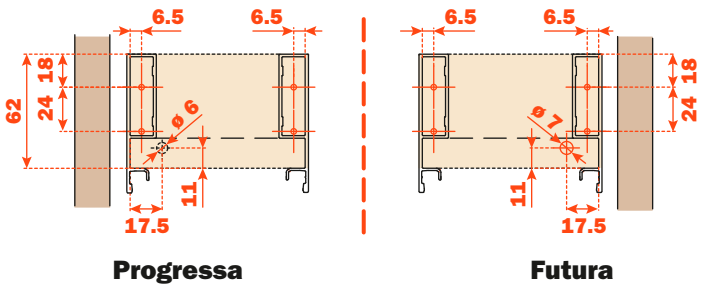

Lineabox^{Easy} - 3-Sided

Lineabox Easy - 3-Sided - H 101 mm

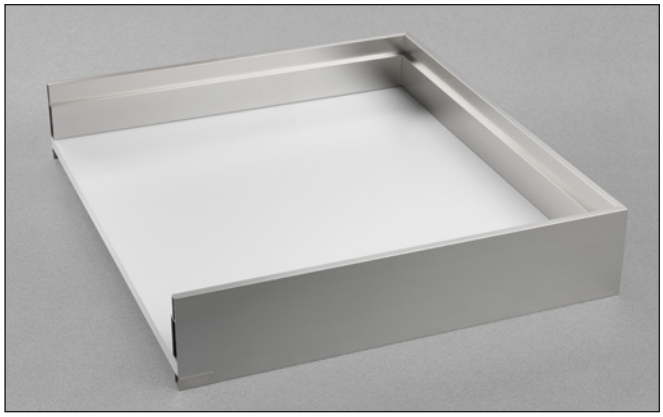

Lineabox Easy metal sides, wooden bottom.
Height of the side 101 mm - Internal height 72 mm.
For use with Progressa and Futura full-extension runners.

- Supplied in 3 metre length side and back profiles or cut to length
- The back can be modified according to the width of the cabinet
- Rapid assembly system, with no machinery needed
- Available template for the drilling of the drawer frontal (optional)
- Rapid mounting and removal of drawer frontal
- Height, sideways and depth adjustment of the drawer incorporated in the runner fixing clips
- Bottom thickness: 16 mm
- Material: aluminium
- Sides and back: 45° mitre cut end
- Finishes: White - Grey - Champagne - Stainless steel

Setting of the back and the bottom of the drawer

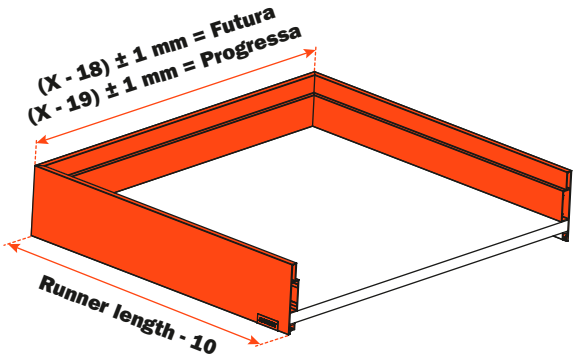

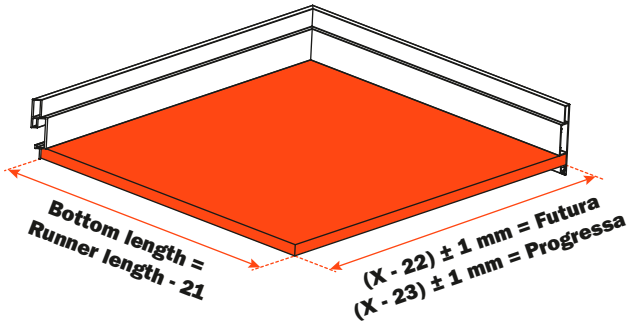

X = Internal width of the cabinet

Elements of the drawer

1	**SMGR12AGXA** Screw-on frontal and back fixing **SMGR12AGCA** Knock-in frontal and back fixing	2 pcs.
2	**AMGPXA3** Frontal and back connecting fitting	2 pcs.
3	**SCCX83H9** (Nickel-plated) **SCCX83H6** (Titanium) Cover cap with embossed logo **SCXX83H9** (Nickel-plated) Cover cap with silk-screen printed logo	2 pcs.

4	**AMGPSP3** Left back connecting fitting	1 pcs.
5	**AMGPDP3** Right back connecting fitting	1 pcs.
6	**SMGP89P3MA** Medium corner connector	2 pcs.
7	**AMSRX33** Reinforcing support for the bottom of the drawer	1 pcs.

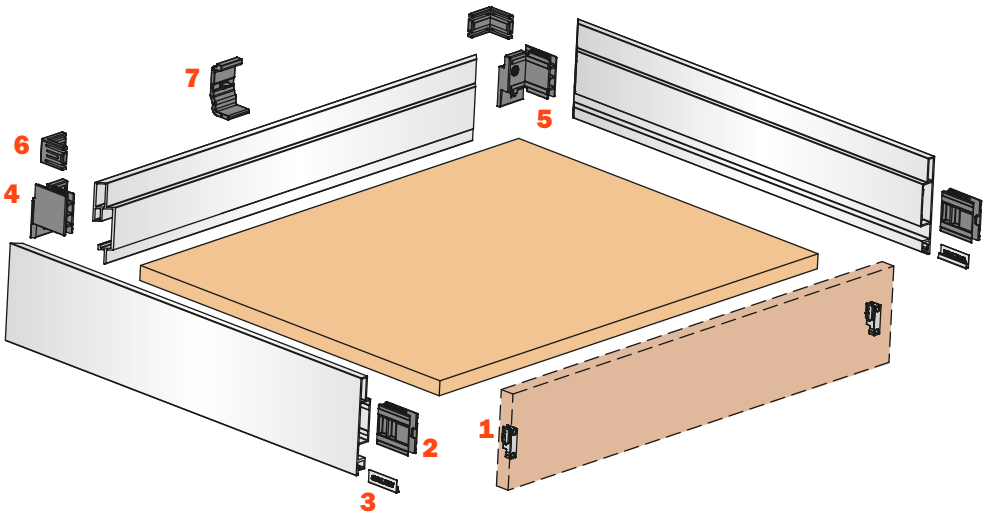

Dimensions

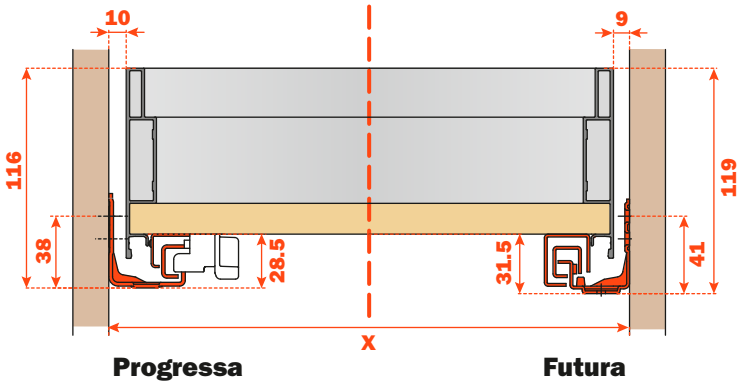

Dimensions of the metal side

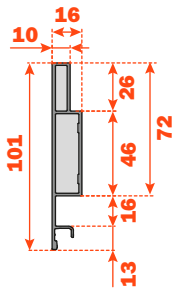

Frontal drilling

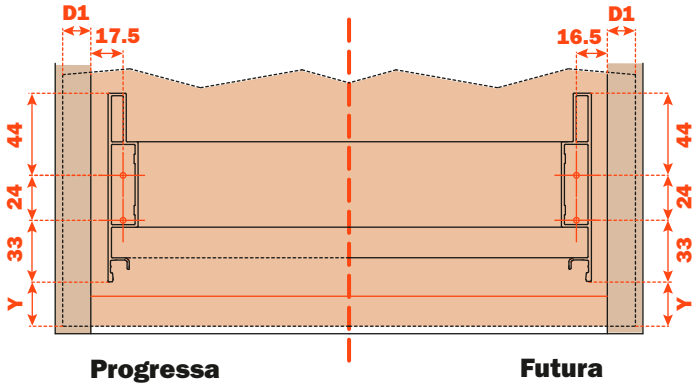

D1 = Frontal overlay on side of the cabinet

Y = Distance from the lower edge of the frontal to the Lineabox Easy side

The drilling of the frontal can be done using the **AGDLXA6 template**.

Lineabox Easy - 3-Sided - H 178 mm

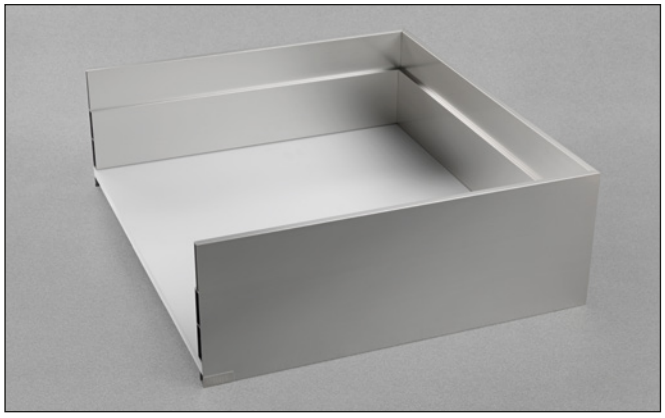

Lineabox Easy metal sides, wooden bottom.
Height of the side 178 mm - Internal height 149 mm.
For use with Progressa and Futura full-extension runners.

- Supplied in 3 metre length side and back profiles or cut to length
- The back can be modified according to the width of the cabinet
- Rapid assembly system, with no machinery needed
- Available template for the drilling of the drawer frontal (optional)
- Rapid mounting and removal of drawer frontal
- Height, sideways and depth adjustment of the drawer incorporated in the runner fixing clips
- Bottom thickness: 16 mm
- Material: aluminium
- Sides and back: 45° mitre cut end
- Finishes: White - Grey - Champagne - Stainless steel

Setting of the back and the bottom of the drawer

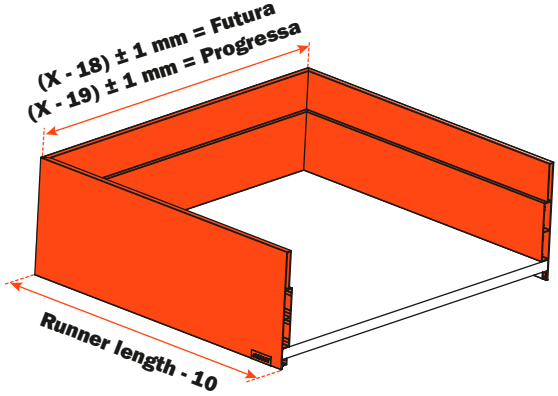

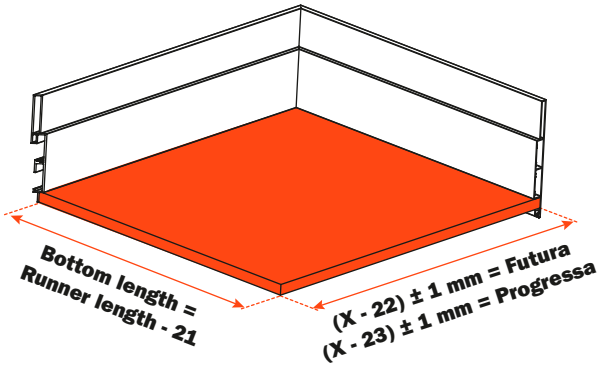

X = Internal width of the cabinet

Elements of the drawer

1	**SMGR12AGXA** Screw-on frontal and back fixing **SMGR12AGCA** Knock-in frontal and back fixing	4 pcs.
2	**AMGPXA3** Frontal and back connecting fitting	4 pcs.
3	**SCCX83H9** (Nickel-plated) **SCCX83H6** (Titanium) Cover cap with embossed logo **SCXX83H9** (Nickel-plated) Cover cap with silk-screen printed logo	2 pcs.

4	**AMGPSP3** Left back connecting fitting	2 pcs.
5	**AMGPDP3** Right back connecting fitting	2 pcs.
6	**SMGP89P3AA** High corner connector	2 pcs.
7	**AMSRX33** Reinforcing support for the bottom of the drawer	1 pcs.

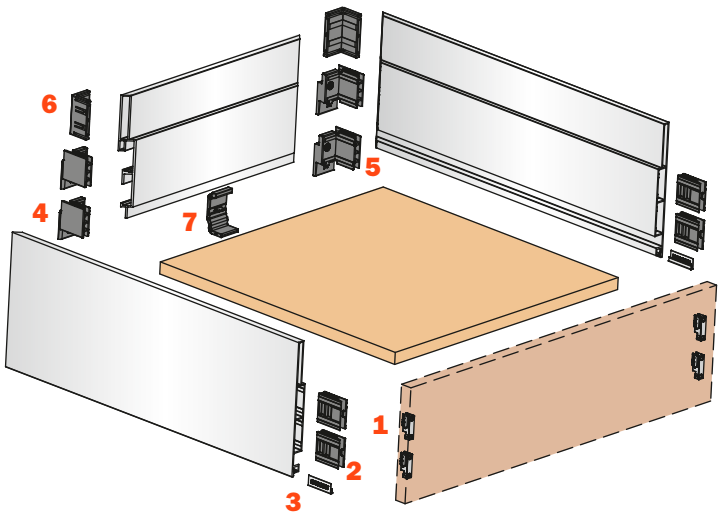

Dimensions

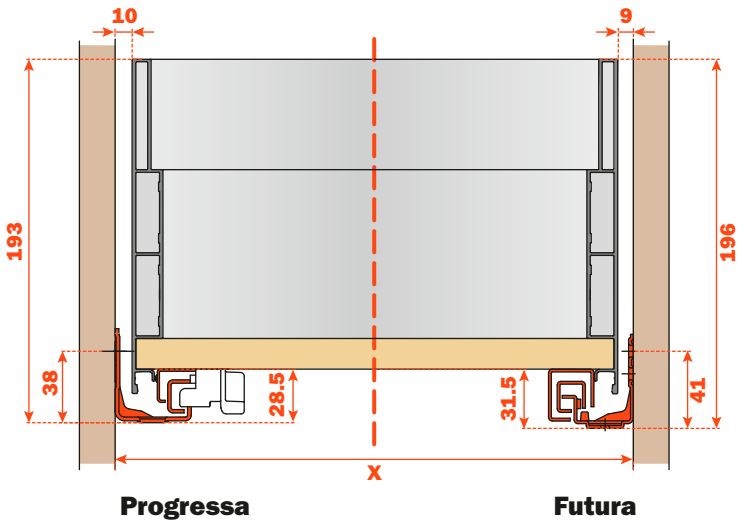

Progressa Futura

Dimensions of the metal side

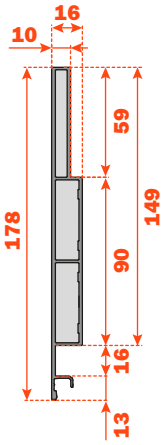

Frontal drilling

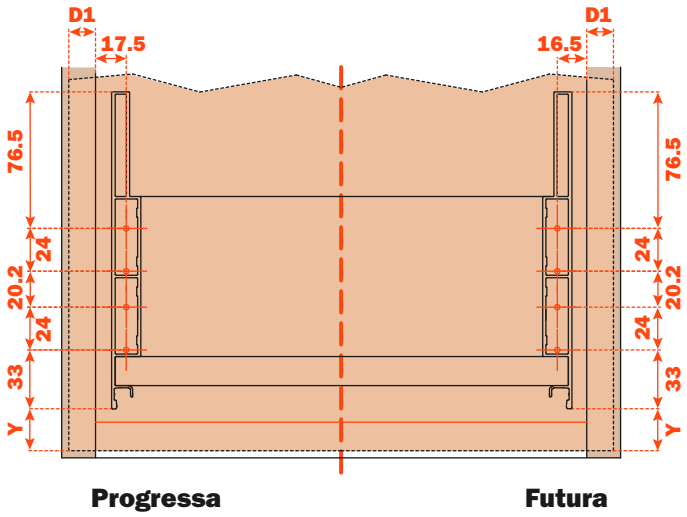

Progressa Futura

D1 = Frontal overlay on side of the cabinet

Y = Distance from the lower edge of the frontal to the Lineabox Easy side

The drilling of the frontal can be done using the **AGDLXA6 template**.

Lineabox Easy - 3-Sided - H 75 mm

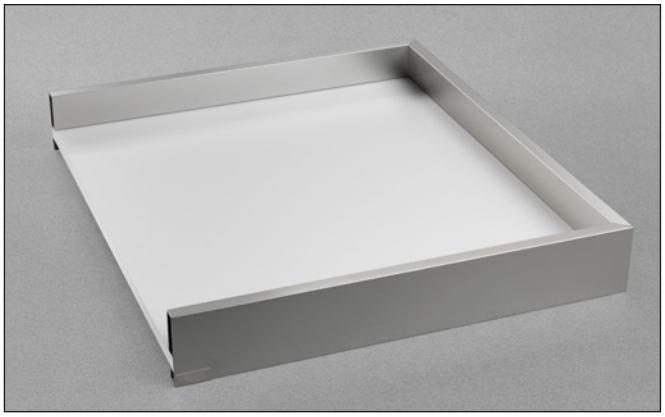

Lineabox Easy metal sides, wooden bottom.
Height of the side 75 mm - Internal height 46 mm.
For use with Progressa and Futura full-extension runners.

- Supplied in 3 metre length side and back profiles or cut to length
- The back can be modified according to the width of the cabinet
- Rapid assembly system, with no machinery needed
- Available template for the drilling of the drawer frontal (optional)
- Rapid mounting and removal of drawer frontal
- Height, sideways and depth adjustment of the drawer incorporated in the runner fixing clips
- Bottom thickness: 16 mm
- Material: aluminium
- Sides and back: 45° mitre cut end
- Finishes: White - Grey - Champagne - Stainless steel

Setting of the back and the bottom of the drawer

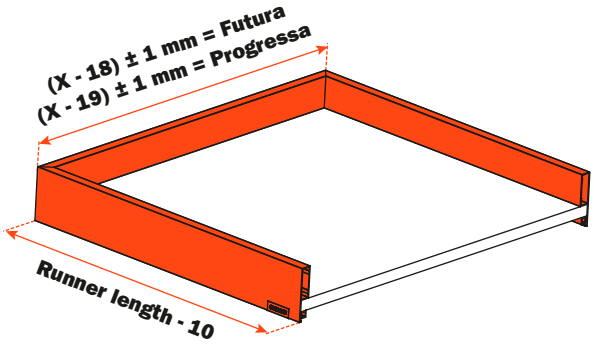

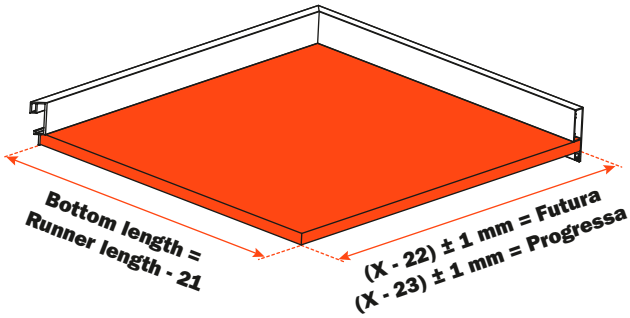

X = Internal width of the cabinet

Elements of the drawer

1	**SMGR12AGXA** Screw-on frontal and back fixing **SMGR12AGCA** Knock-in frontal and back fixing	2 pcs.
2	**AMGPXA3** Frontal and back connecting fitting	2 pcs.
3	**SCCX83H9** (Nickel-plated) **SCCX83H6** (Titanium) Cover cap with embossed logo **SCXX83H9** (Nickel-plated) Cover cap with silk-screen printed logo	2 pcs.

4	**AMGPSP3** Left back connecting fitting	1 pcs.
5	**AMGPDP3** Right back connecting fitting	1 pcs.
6	**AMSRX33** Reinforcing support for the bottom of the drawer	1 pcs.

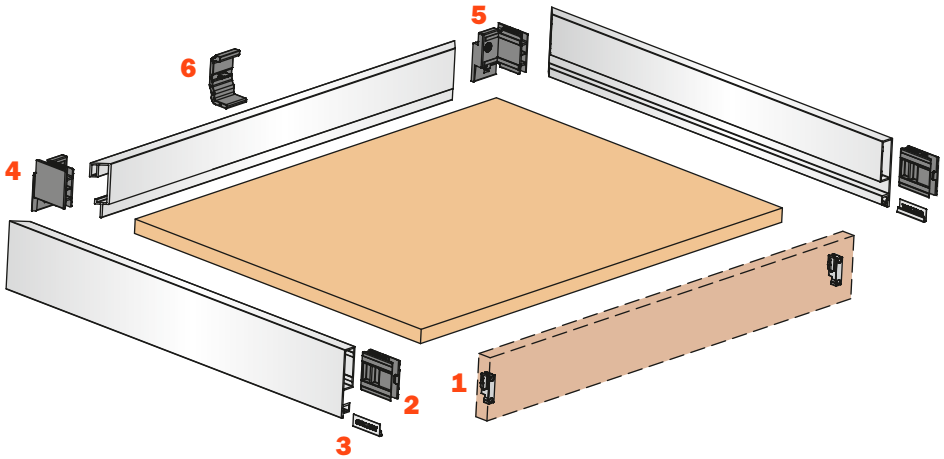

Dimensions

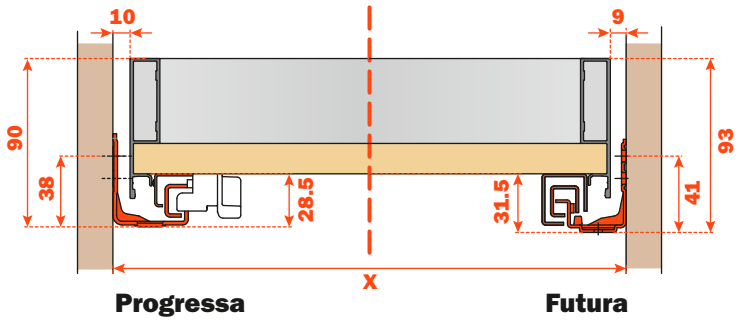

Dimensions of the metal side

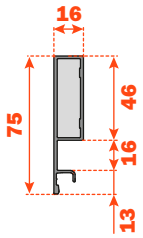

Frontal drilling

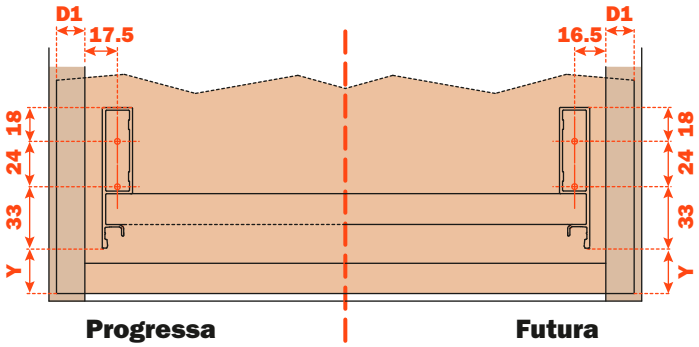

D1 = Frontal overlay on side of the cabinet

Y = Distance from the lower edge of the frontal to the Lineabox Easy side

The drilling of the frontal can be done using the **AGDLXA6 template**.

Lineabox^{Easy} - 3-Sided Under-sink drawer

Lineabox Easy - 3-Sided - Under-sink drawer - H 101 mm

Lineabox Easy metal sides, wooden bottom.
Height of the side 101 mm - Internal height 72 mm.
For use with Progressa and Futura full-extension runners.

- Supplied in 3 metre length side and back profiles or cut to length
- The back can be modified according to the width of the cabinet
- Rapid assembly system, with no machinery needed
- Available template for the drilling of the drawer frontal (optional)
- Rapid mounting and removal of drawer frontal
- Height, sideways and depth adjustment of the drawer incorporated in the runner fixing clips
- Bottom thickness: 16 mm
- Material: aluminium
- Sides and back: 45° mitre cut end
- Finishes: White - Grey - Champagne - Stainless steel

Setting of the back and the bottom of the drawer

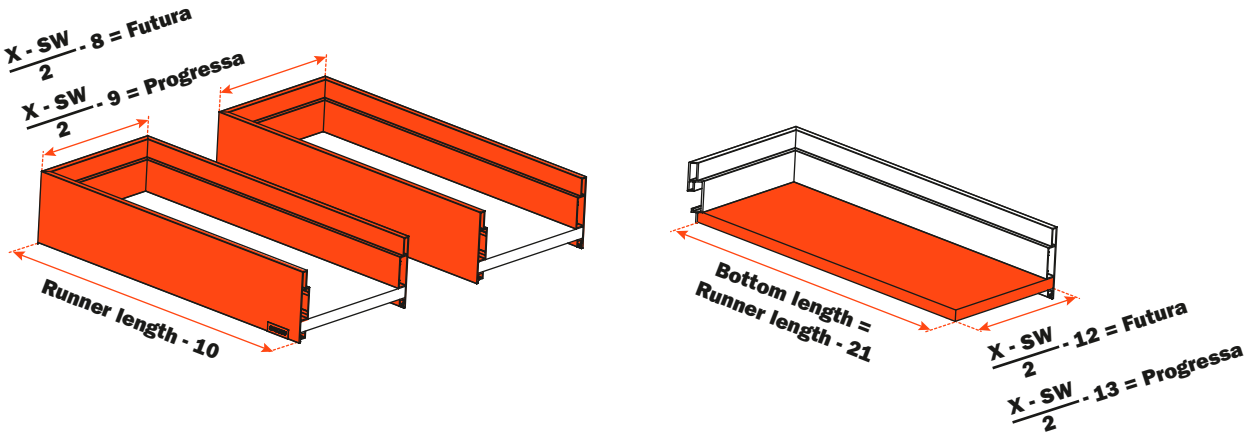

X = Internal width of the cabinet
SW = Width of the recess for under-sink

Elements of the drawer

1	**SMGR12AGXA** Screw-on frontal and back fixing **SMGR12AGCA** Knock-in frontal and back fixing	4 pcs.
2	**AMGPXA3** Frontal and back connecting fitting	4 pcs.
3	**SCCX83H9** (Nickel-plated) **SCCX83H6** (Titanium) Cover cap with embossed logo **SCXX83H9** (Nickel-plated) Cover cap with silk-screen printed logo	2 pcs.

4	**AMGPSP3** Left back connecting fitting	2 pcs.
5	**AMGPDP3** Right back connecting fitting	2 pcs.
6	**SMGP89P3MA** Medium corner connector	4 pcs.

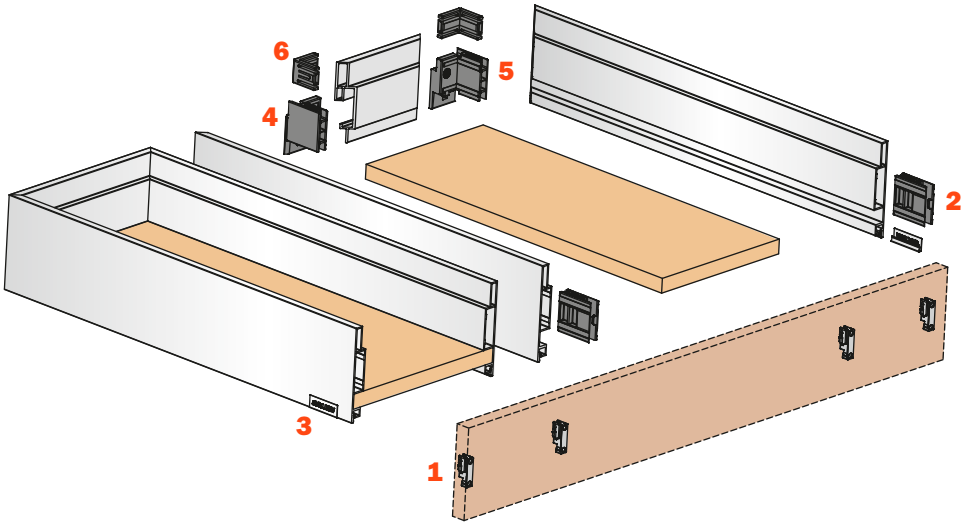

Dimensions

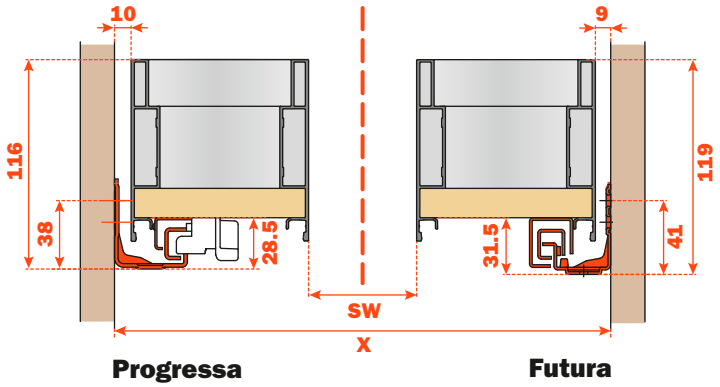

Dimensions of the metal side

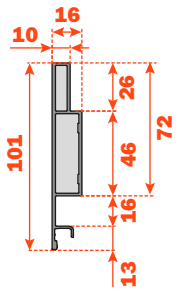

Frontal drilling

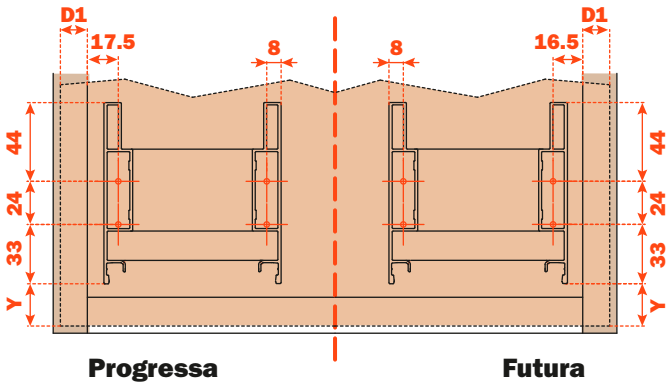

D1 = Frontal overlay on side of the cabinet

Y = Distance from the lower edge of the frontal to the Lineabox Easy side

The drilling of the frontal can be done using the **AGDLXA6 template**.

Lineabox Easy - 3-Sided - Under-sink drawer - H 178 mm

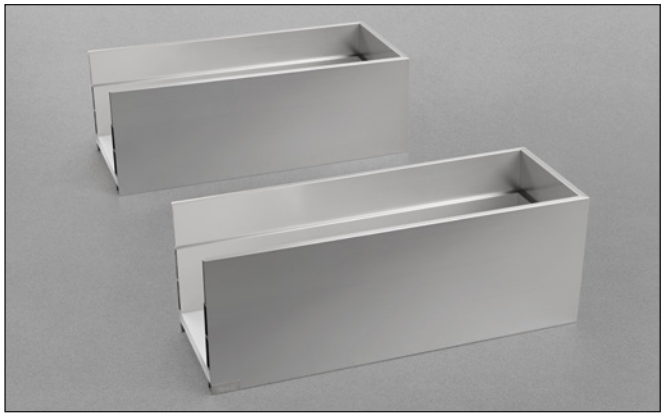

Lineabox Easy metal sides, wooden bottom.
Height of the side 178 mm - Internal height 149 mm.
For use with Progressa and Futura full-extension runners.

- Supplied in 3 metre length side and back profiles or cut to length
- The back can be modified according to the width of the cabinet
- Rapid assembly system, with no machinery needed
- Available template for the drilling of the drawer frontal (optional)
- Rapid mounting and removal of drawer frontal
- Height, sideways and depth adjustment of the drawer incorporated in the runner fixing clips
- Bottom thickness: 16 mm
- Material: aluminium
- Sides and back: 45° mitre cut end
- Finishes: White - Grey - Champagne - Stainless steel

Setting of the back and the bottom of the drawer

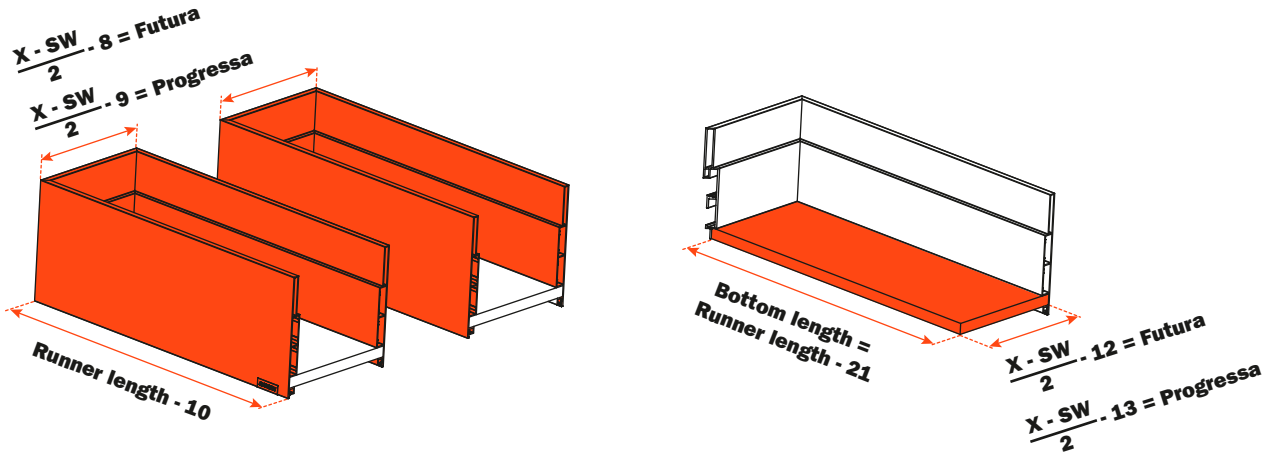

X = Internal width of the cabinet
SW = Width of the recess for under-sink

Elements of the drawer

1	**SMGR12AGXA** Screw-on frontal and back fixing **SMGR12AGCA** Knock-in frontal and back fixing	8 pcs.
2	**AMGPXA3** Frontal and back connecting fitting	8 pcs.
3	**SCCX83H9** (Nickel-plated) **SCCX83H6** (Titanium) Cover cap with embossed logo **SCXX83H9** (Nickel-plated) Cover cap with silk-screen printed logo	2 pcs.

4	**AMGPSP3** Left back connecting fitting	4 pcs.
5	**AMGPDP3** Right back connecting fitting	4 pcs.
6	**SMGP89P3AA** High corner connector	4 pcs.

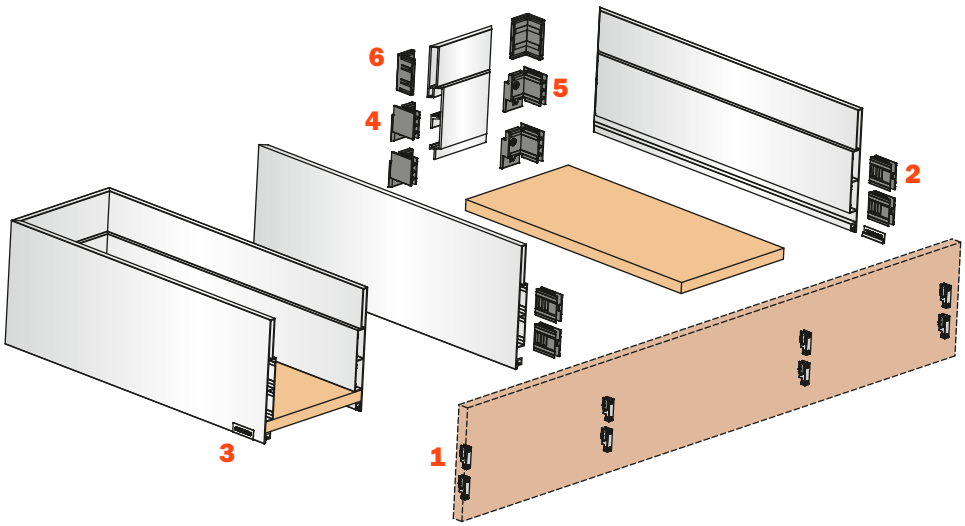

Dimensions

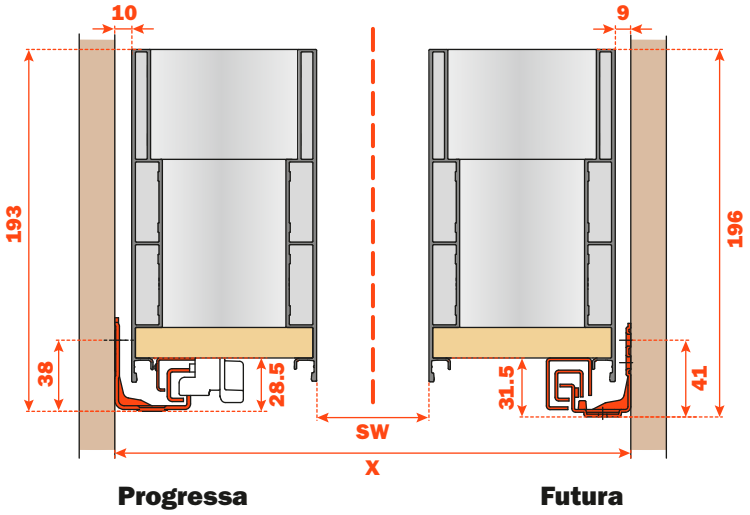

Dimensions of the metal side

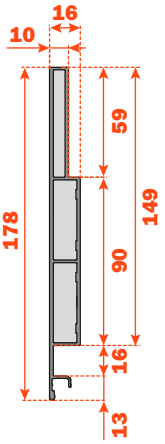

Frontal drilling

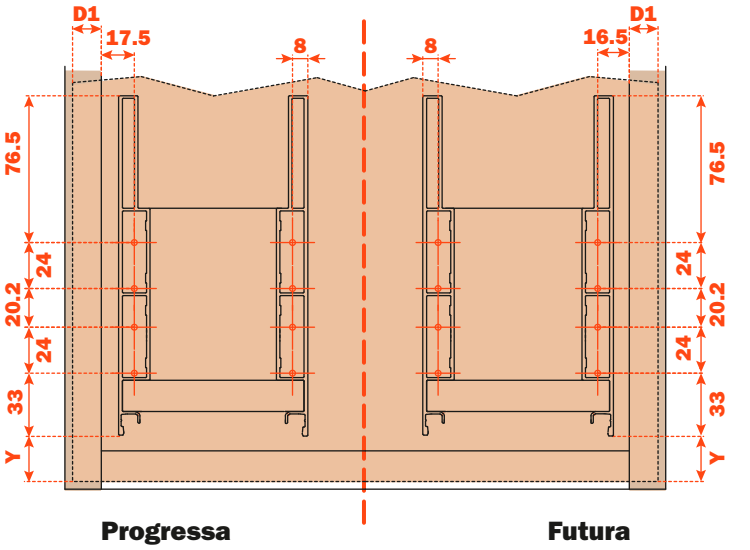

D1 = Frontal overlay on side of the cabinet

Y = Distance from the lower edge of the frontal to the Lineabox Easy side

The drilling of the frontal can be done using the **AGDLXA6 template**.

Lineabox Easy - 3-Sided - Under-sink drawer - H 75 mm

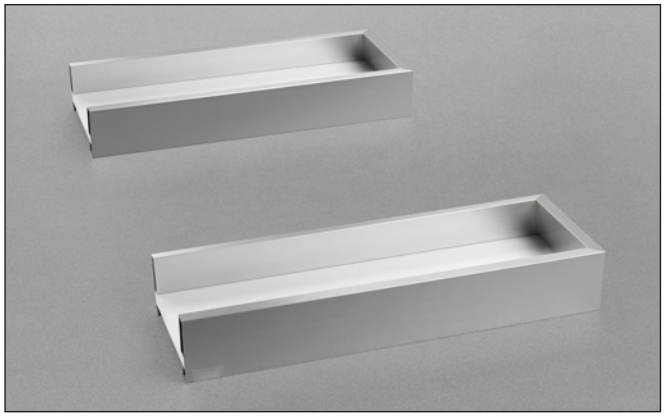

Lineabox Easy metal sides, wooden bottom.
Height of the side 75 mm - Internal height 46 mm.
For use with Progressa and Futura full-extension runners.

- Supplied in 3 metre length side and back profiles or cut to length
- The back can be modified according to the width of the cabinet
- Rapid assembly system, with no machinery needed
- Available template for the drilling of the drawer frontal (optional)
- Rapid mounting and removal of drawer frontal
- Height, sideways and depth adjustment of the drawer incorporated in the runner fixing clips
- Bottom thickness: 16 mm
- Material: aluminium
- Sides and back: 45° mitre cut end
- Finishes: White - Grey - Champagne - Stainless steel

Setting of the back and the bottom of the drawer

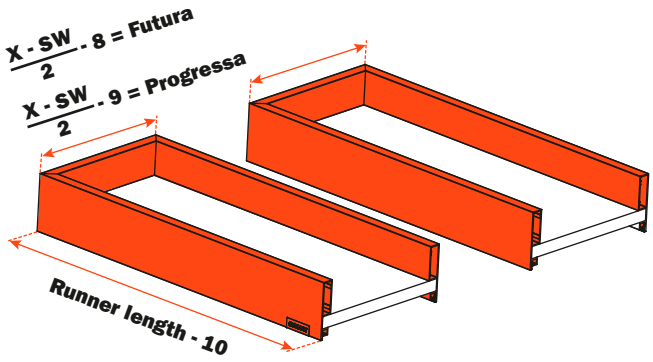

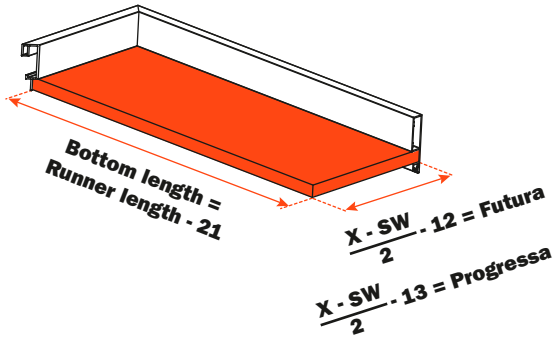

X = Internal width of the cabinet
SW = Width of the recess for under-sink

Elements of the drawer

1	**SMGR12AGXA** Screw-on frontal and back fixing **SMGR12AGCA** Knock-in frontal and back fixing	4 pcs.
2	**AMGPXA3** Frontal and back connecting fitting	4 pcs.
3	**SCCX83H9** (Nickel-plated) **SCCX83H6** (Titanium) Cover cap with embossed logo **SCXX83H9** (Nickel-plated) Cover cap with silk-screen printed logo	2 pcs.

4	**AMGPSP3** Left back connecting fitting	4 pcs.
5	**AMGPDP3** Right back connecting fitting	4 pcs.

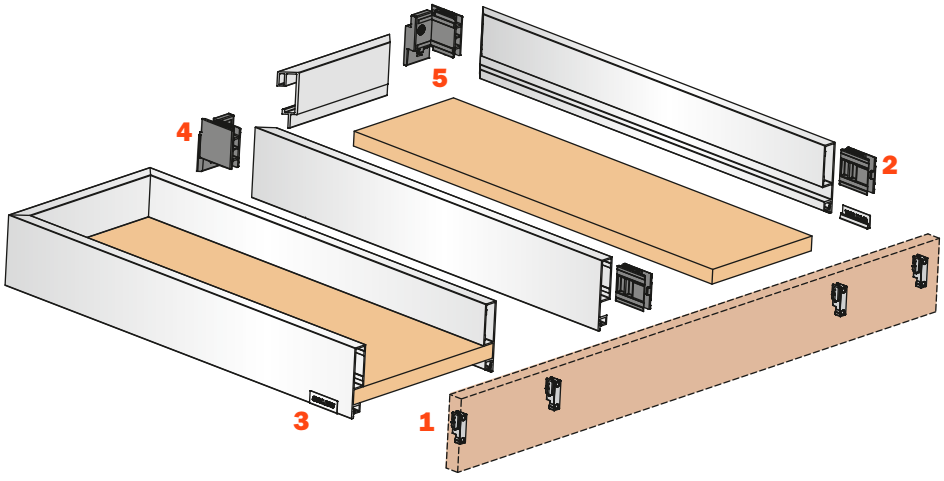

Dimensions

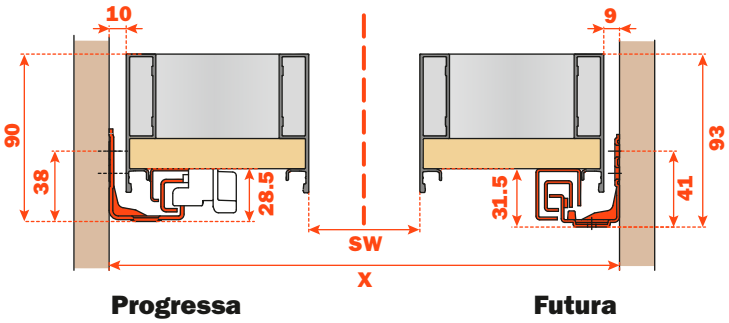

Dimensions of the metal side

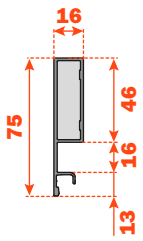

Frontal drilling

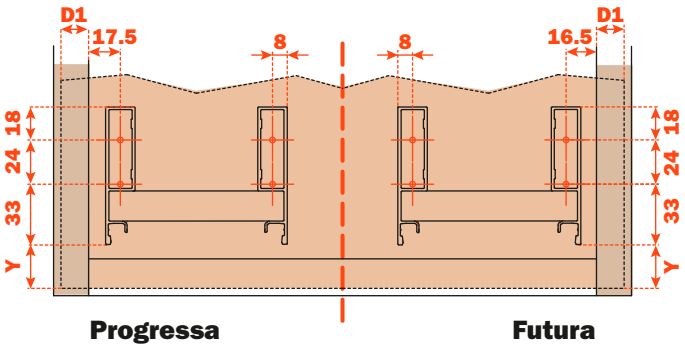

D1 = Frontal overlay on side of the cabinet

Y = Distance from the lower edge of the frontal to the Lineabox Easy side

The drilling of the frontal can be done using the **AGDLXA6 template**.

Lineabox^{Easy}
Front panel for internal drawer

Lineabox Easy - Front panel for internal drawer - H 101 mm

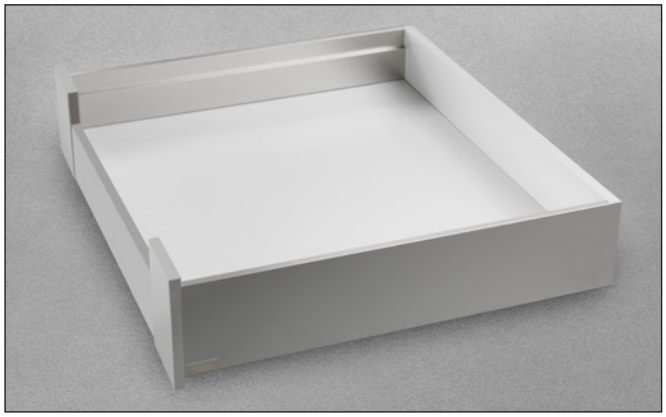

Height of Lineabox Easy side 101 mm.
Max. height of front panel 126 mm.
For use with Progressa and Futura full-extension runners.

- Included material:
  - aluminium for front panel
  - plastic for front panel adapters
  - metal for covers
- Complementary material:
  - Lineabox Easy: to choose between 2-Sided, 2-Sided - Inset Back and 3-Sided
- Rapid assembly system, with no machinery needed
- Frontal fixings are already premounted
- Rapid mounting and removal of front panel
- Finishes: White - Grey - Champagne - Stainless steel

Assembly details (The example shows the frontal assembled with Lineabox Easy 2-Sided)

Cut the front panel to length

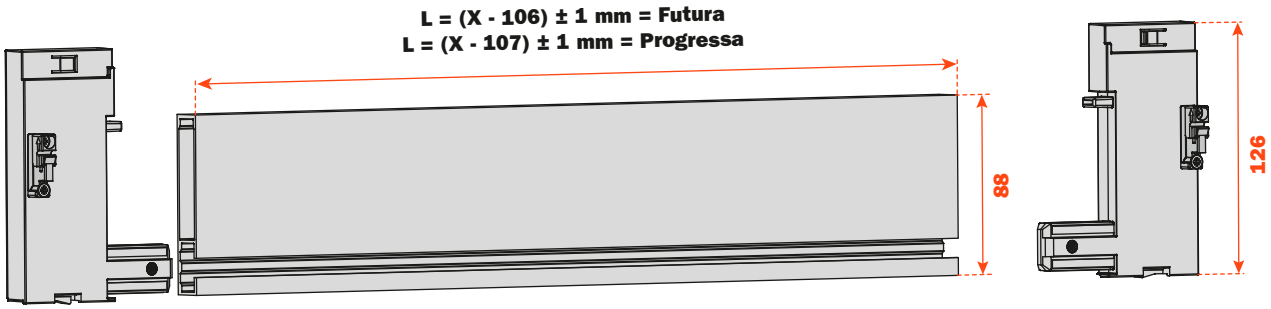

X = Internal width of the cabinet (Max. 1168 mm)

Insert the front panel adapters into the front panel and tighten the locking screws.
Frontal fixings are already premounted.

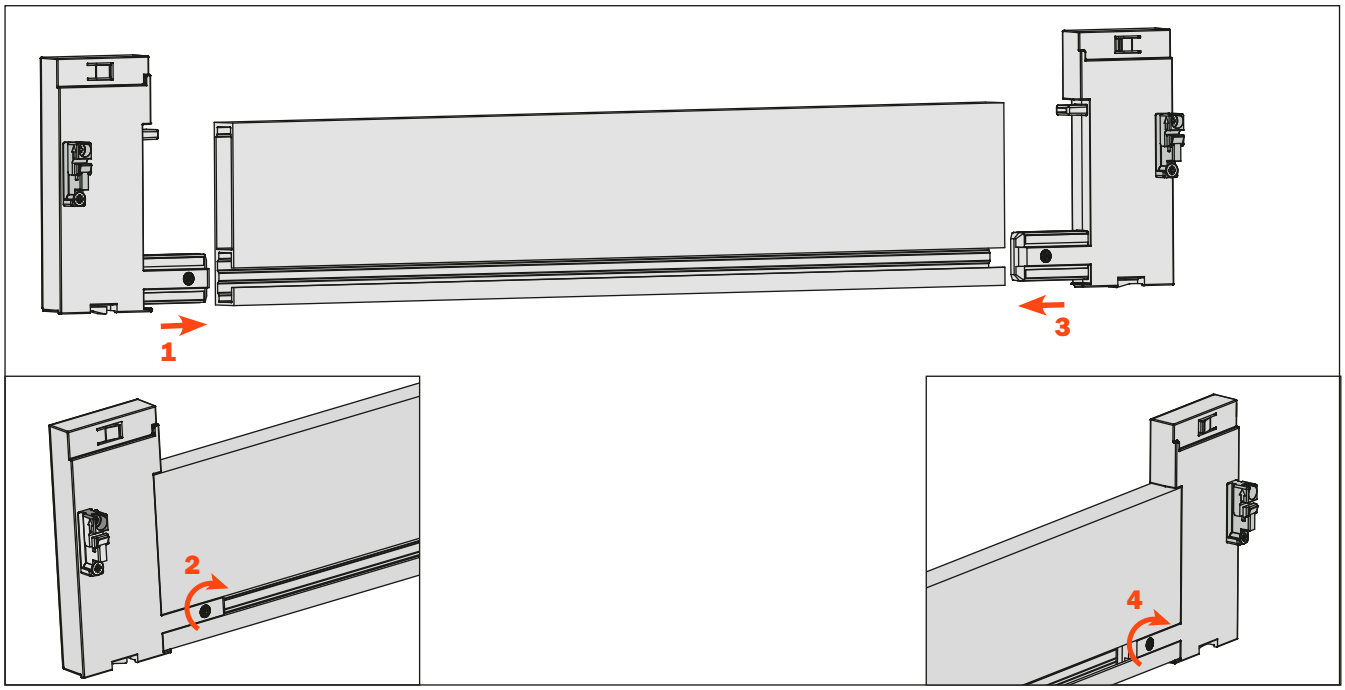

Fix the front panel to the drawer

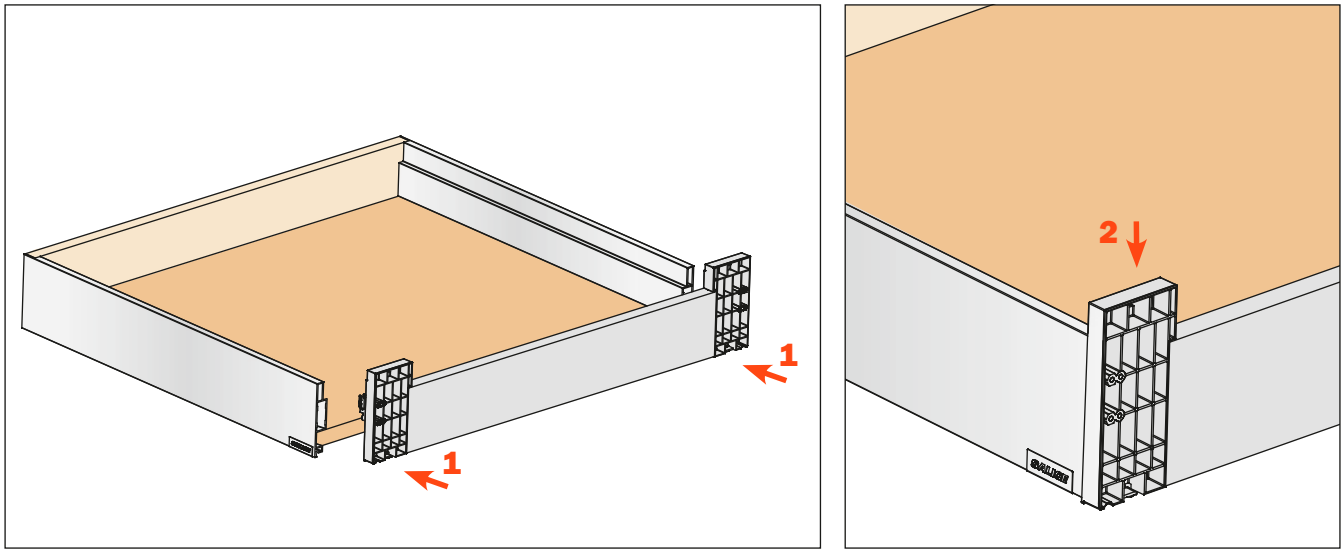

Fix the covers

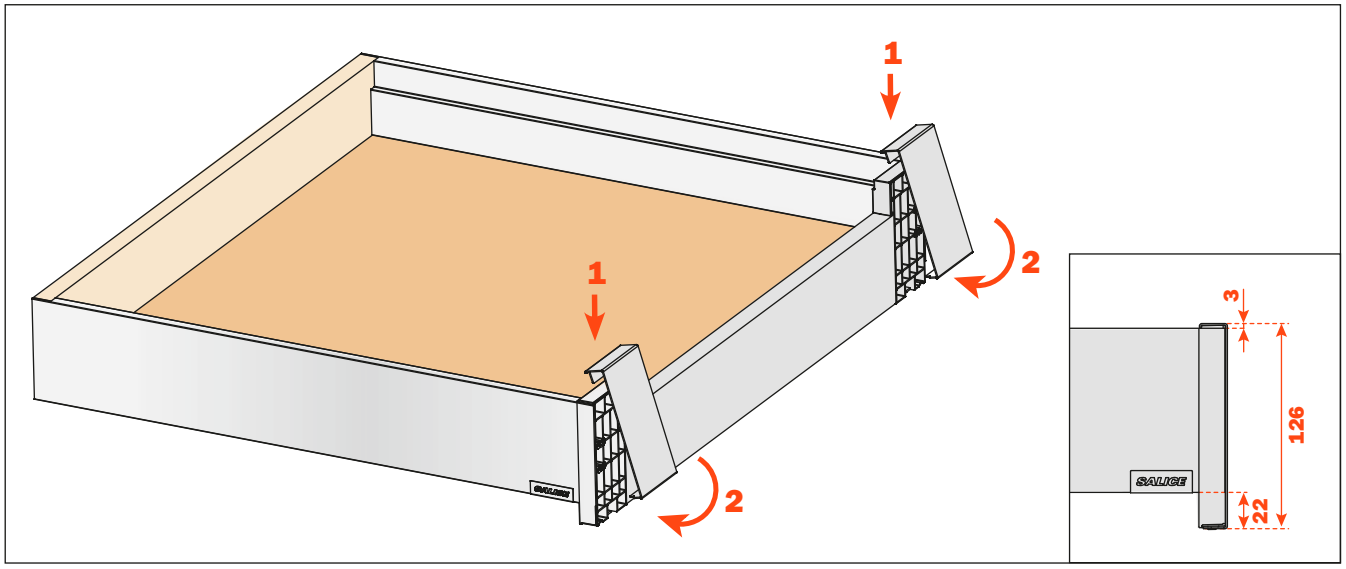

To correct any possible cutting errors of the panel, loosen and retighten the indicated screws

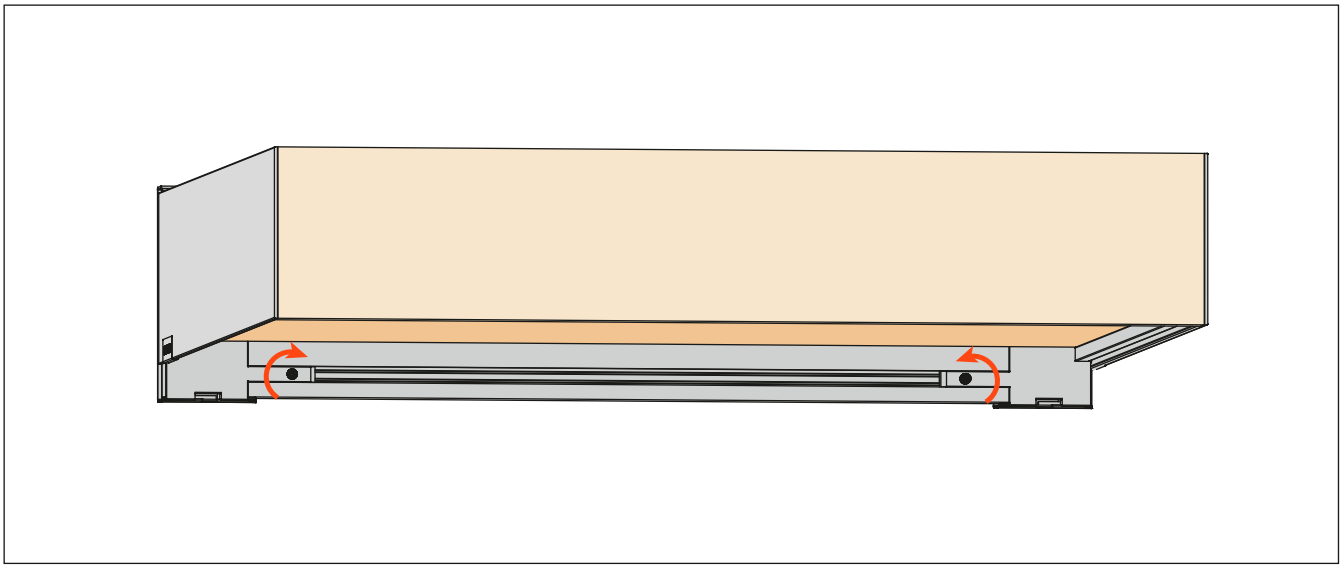

Lineabox Easy - Front panel for internal drawer - H 178 mm

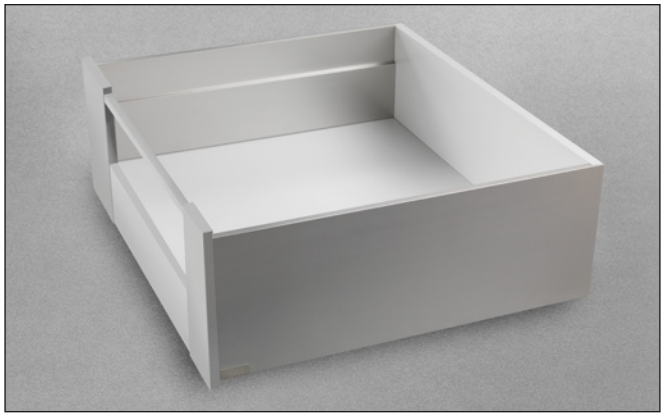

Height of Lineabox Easy side 178 mm.
Max. height of front panel 203 mm.
For use with Progressa and Futura full-extension runners.

- Included material:
  - aluminium for front panel and railing
  - plastic for front panel adapters
  - metal for covers
- Complementary material:
  - Lineabox Easy: to choose between 2-Sided, 2-Sided - Inset Back and 3-Sided
- Rapid assembly system, with no machinery needed
- Frontal fixings are already premounted
- Rapid mounting and removal of front panel
- Finishes: White - Grey - Champagne - Stainless steel

Assembly details (The example shows the frontal assembled with Lineabox Easy 2-Sided)

Cut the front panel and the railing to length

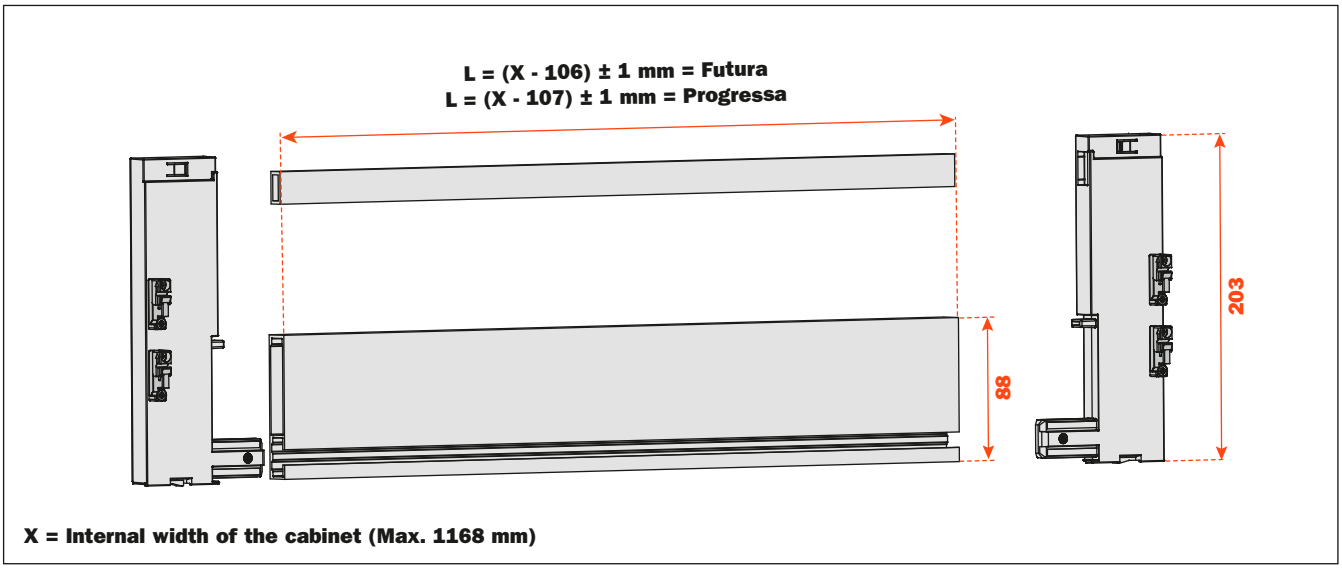

X = Internal width of the cabinet (Max. 1168 mm)

Insert the front panel adapters into the front panel and the railing and tighten the locking screws.
Frontal fixings are already premounted.

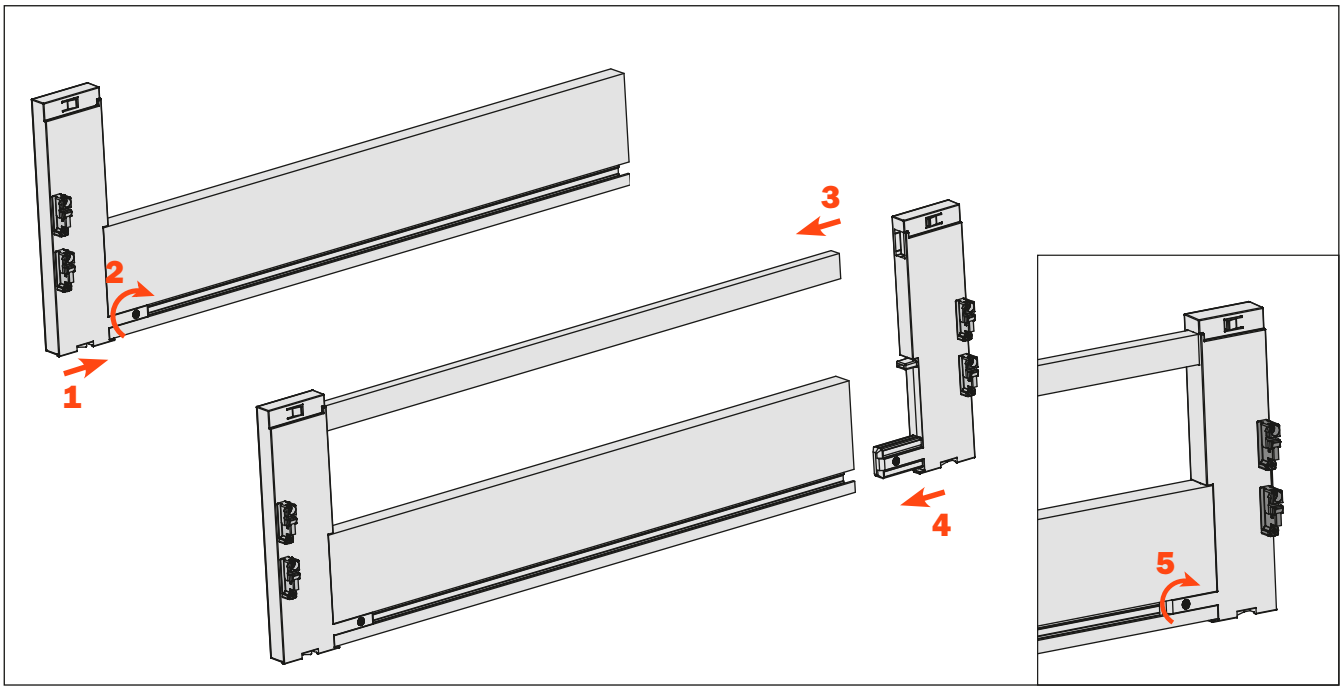

Fix the front panel to the drawer

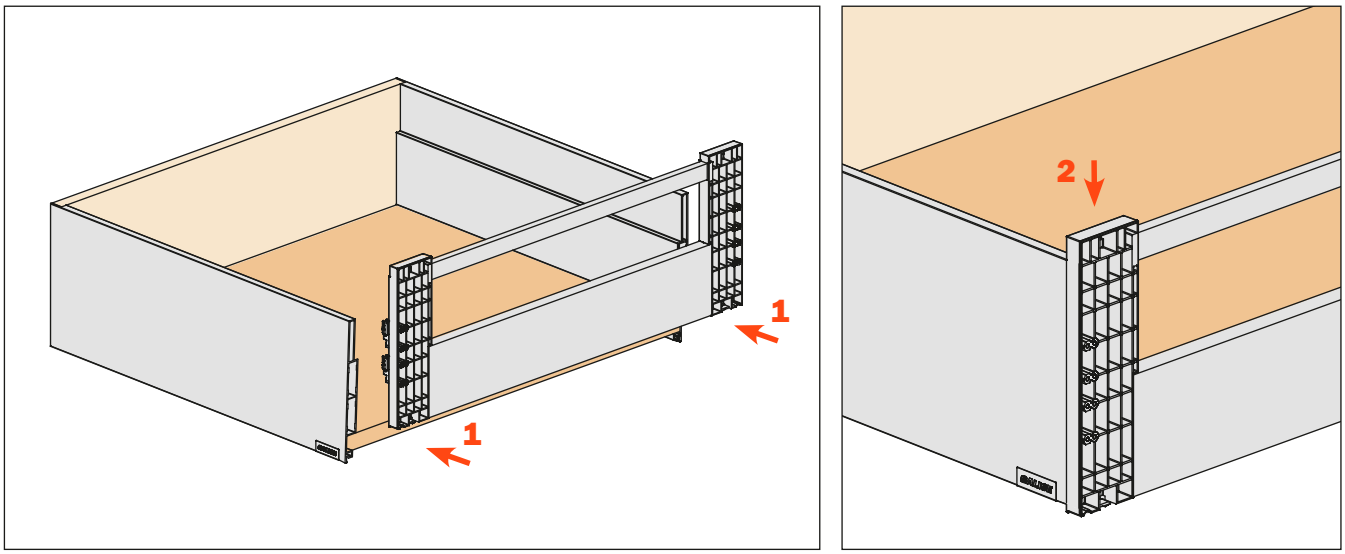

Fix the covers

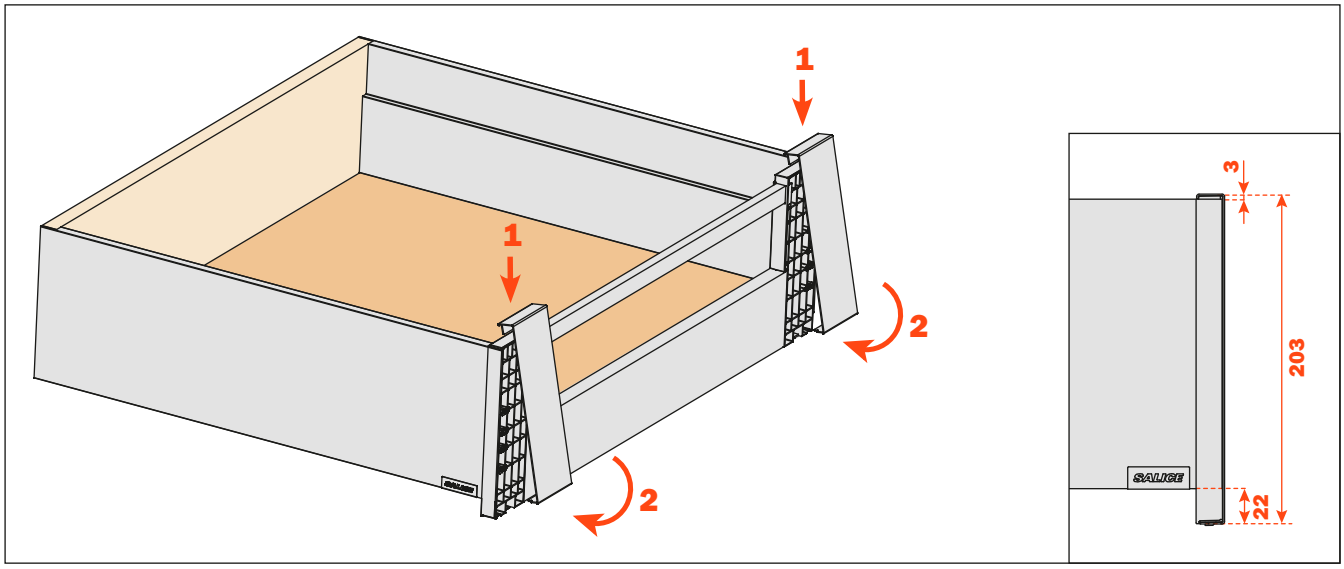

To correct any possible cutting errors of the panel, loosen and retighten the indicated screws

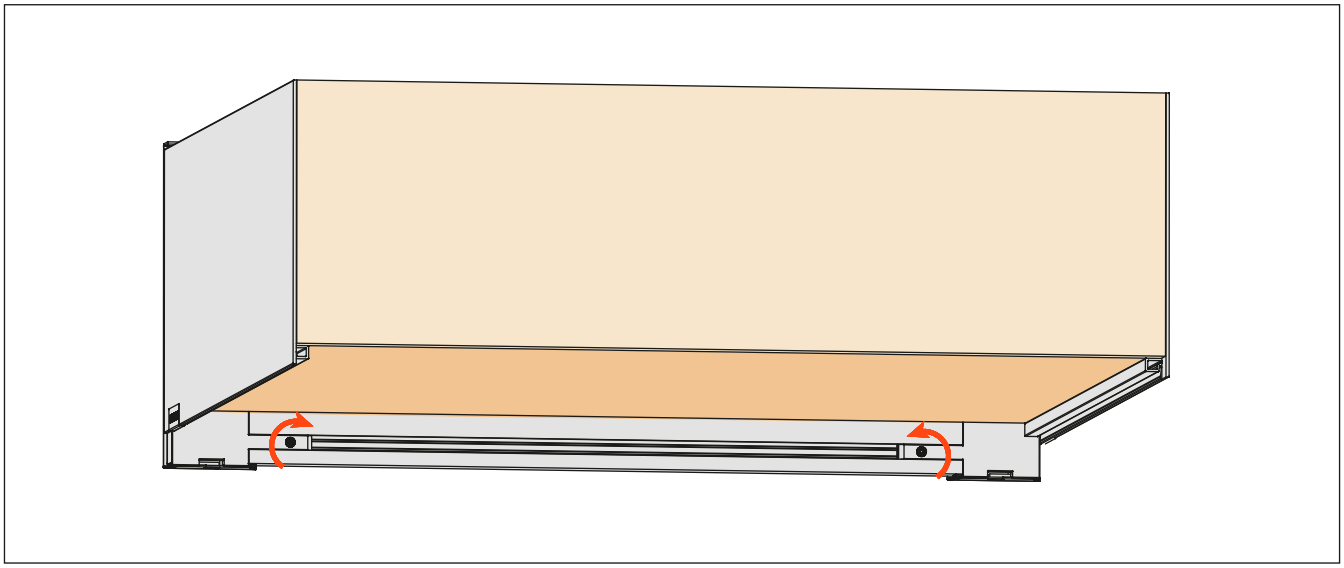

Lineabox Easy - Front panel for internal drawer with insert - H 101 mm

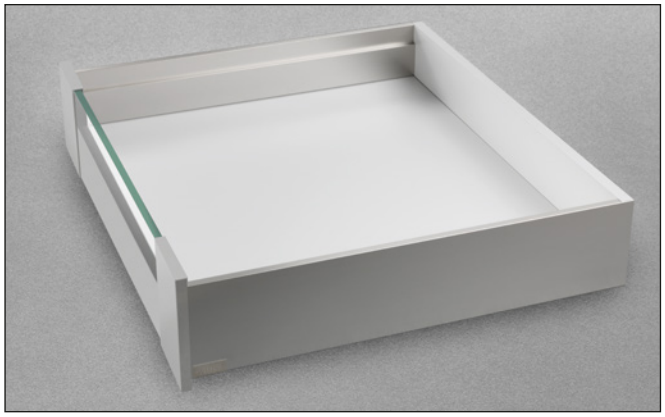

Height of Lineabox Easy side 101 mm.
Max. height of front panel 126 mm.
For use with Progressa and Futura full-extension runners.

- Included material:
  - aluminium for front panel
  - plastic for front panel adapters
  - metal for covers
- Complementary material:
  - Lineabox Easy: to choose between 2-Sided, 2-Sided - Inset Back and 3-Sided
  - decorative insert not included
- Rapid assembly system, with no machinery needed
- Frontal fixings are already premounted
- Rapid mounting and removal of front panel
- Finishes: White - Grey - Champagne - Stainless steel

Assembly details (The example shows the frontal assembled with Lineabox Easy 2-Sided)

Cut the front panel and the insert to length

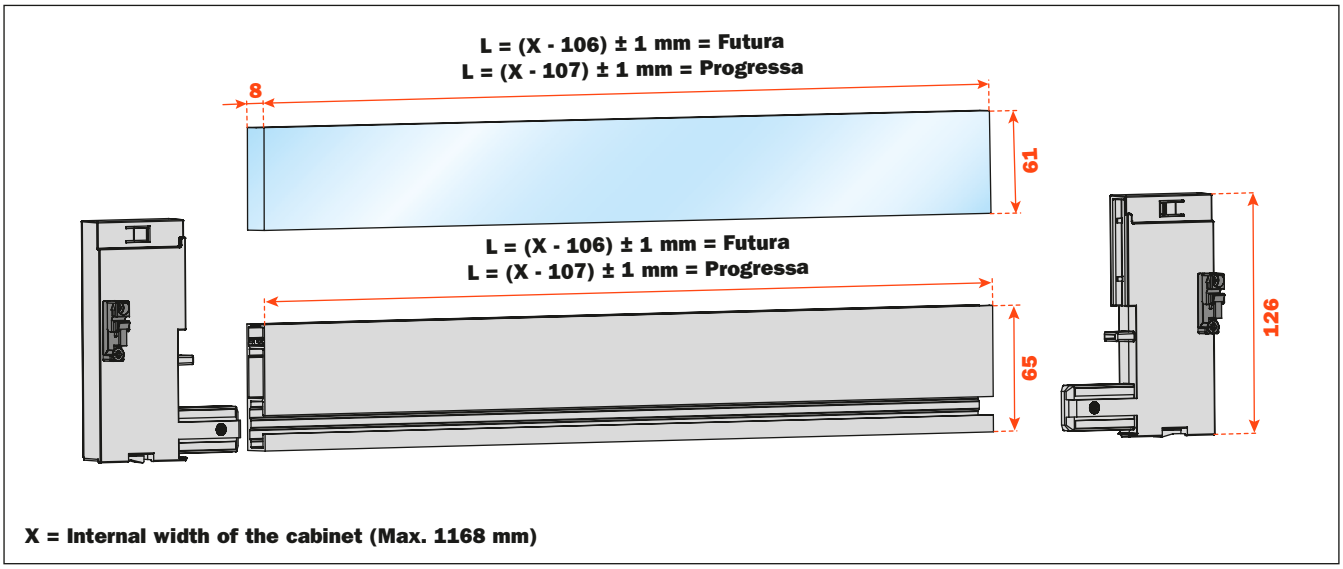

X = Internal width of the cabinet (Max. 1168 mm)

Insert the front panel adapters into the front panel and tighten the locking screws.
Frontal fixings are already premounted.

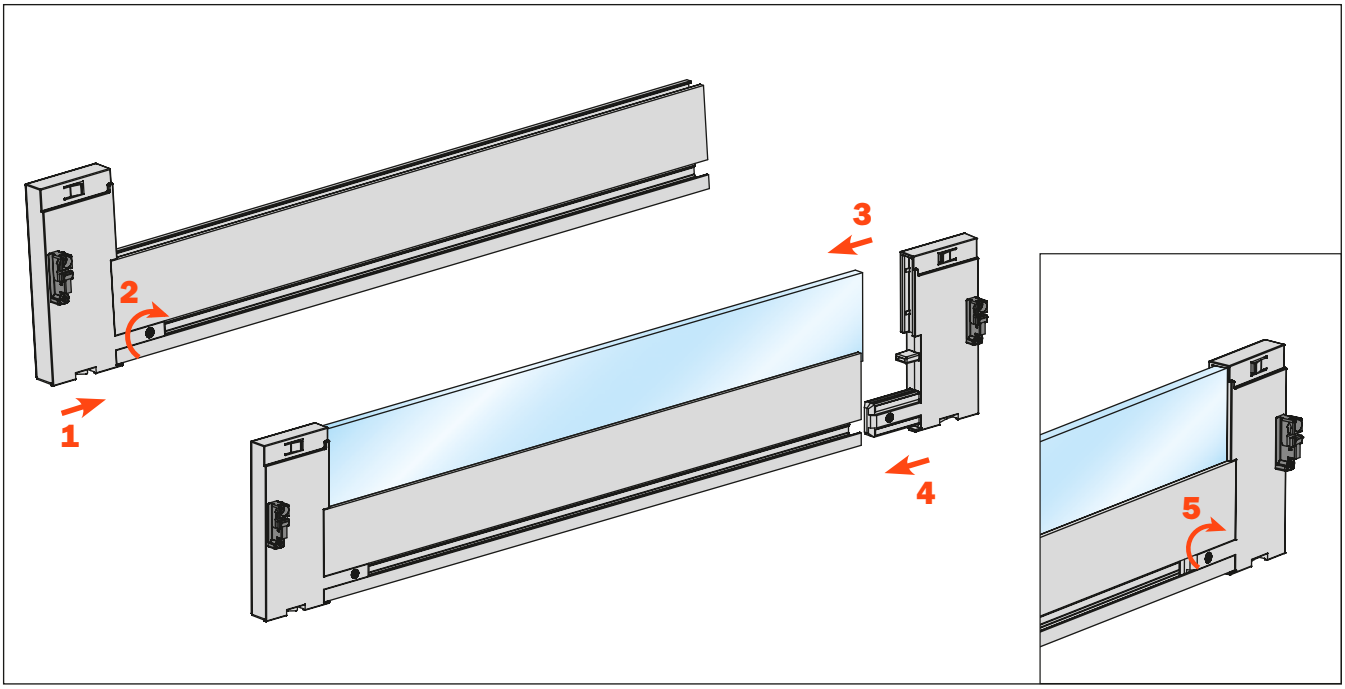

Fix the front panel to the drawer

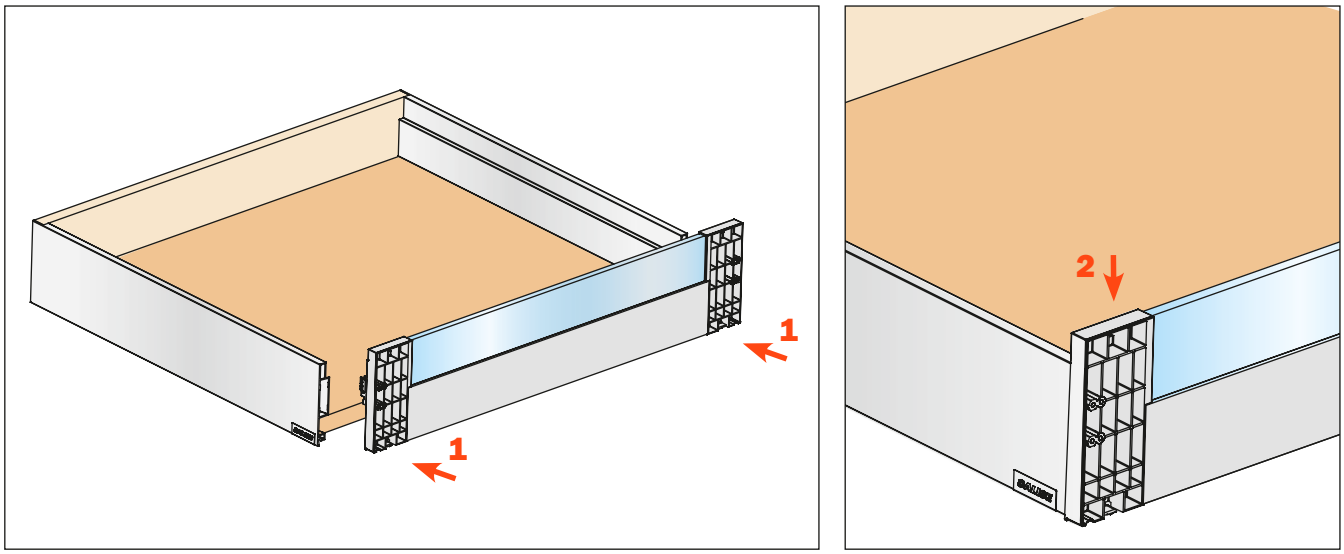

Fix the covers

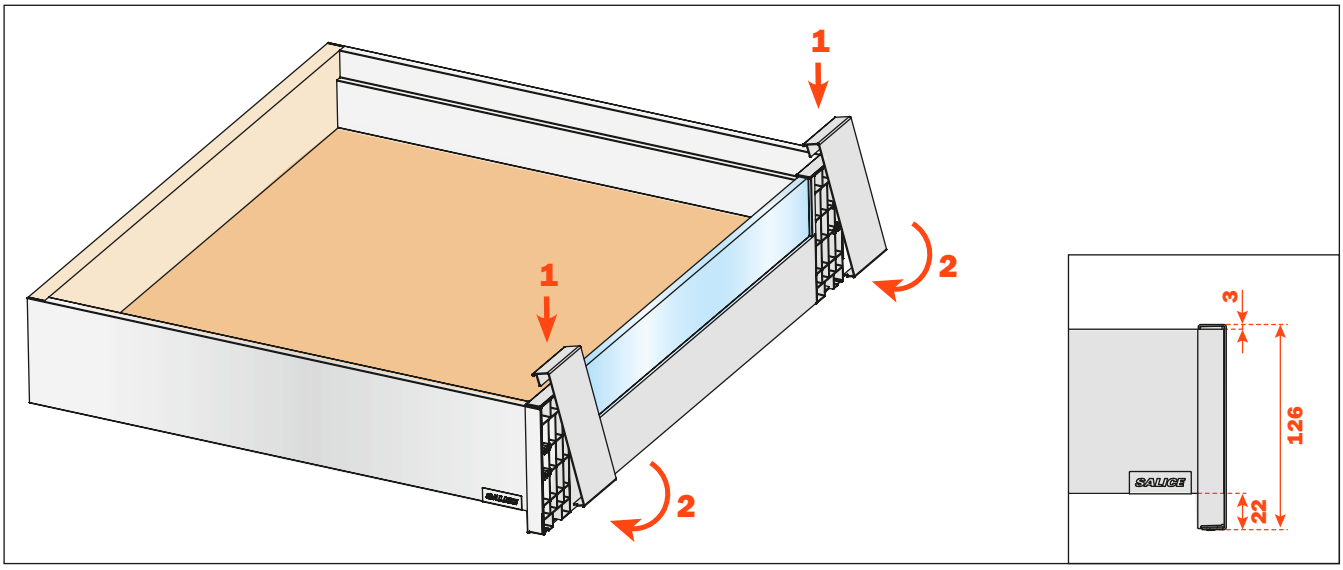

To correct possible cutting errors of the panel, loosen and retighten the indicated screws

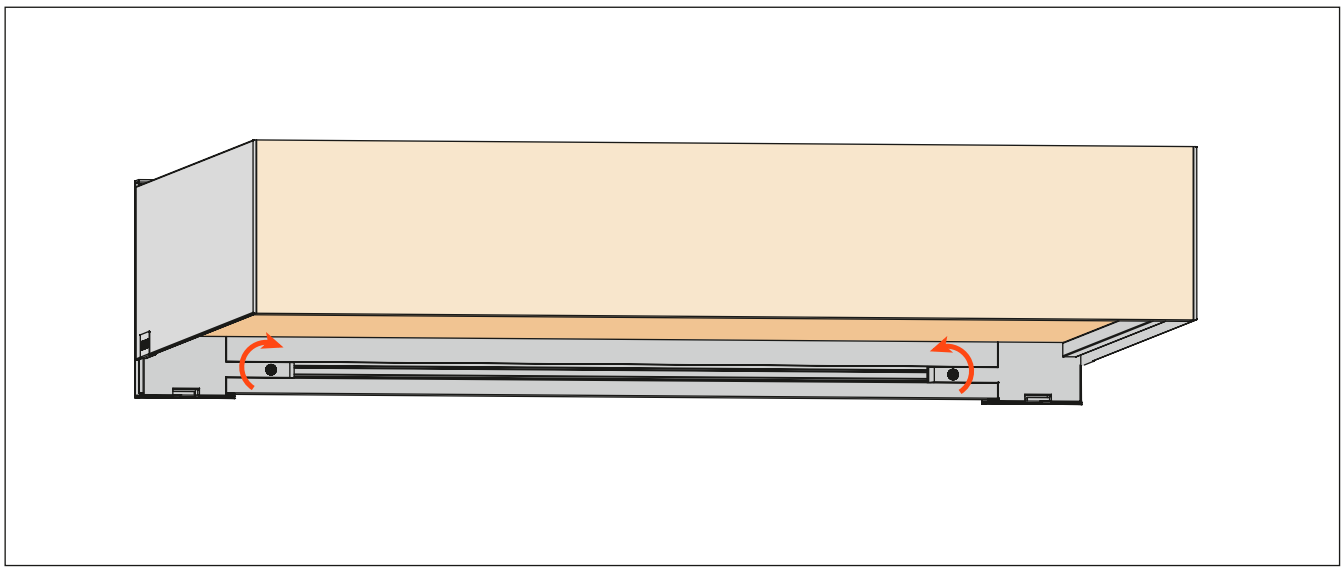

Lineabox Easy - Front panel for internal drawer with insert - H 178 mm

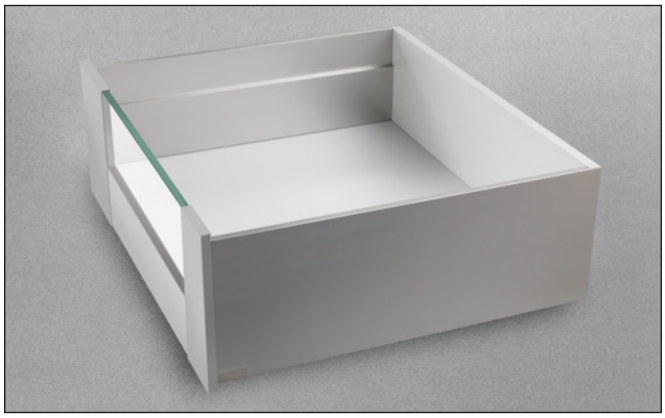

Height of Lineabox Easy side 178 mm.
Max. height of front panel 203 mm.
For use with Progressa and Futura full-extension runners.

- Included material:
  - aluminium for front panel
  - plastic for front panel adapters
  - metal for covers
- Complementary material:
  - Lineabox Easy: to choose between 2-Sided, 2-Sided - Inset Back and 3-Sided
  - decorative insert not included
- Rapid assembly system, with no machinery needed
- Frontal fixings are already premounted
- Rapid mounting and removal of front panel
- Finishes: White - Grey - Champagne - Stainless steel

Assembly details (The example shows the frontal assembled with Lineabox Easy 2-Sided)

Cut the front panel and the insert to length

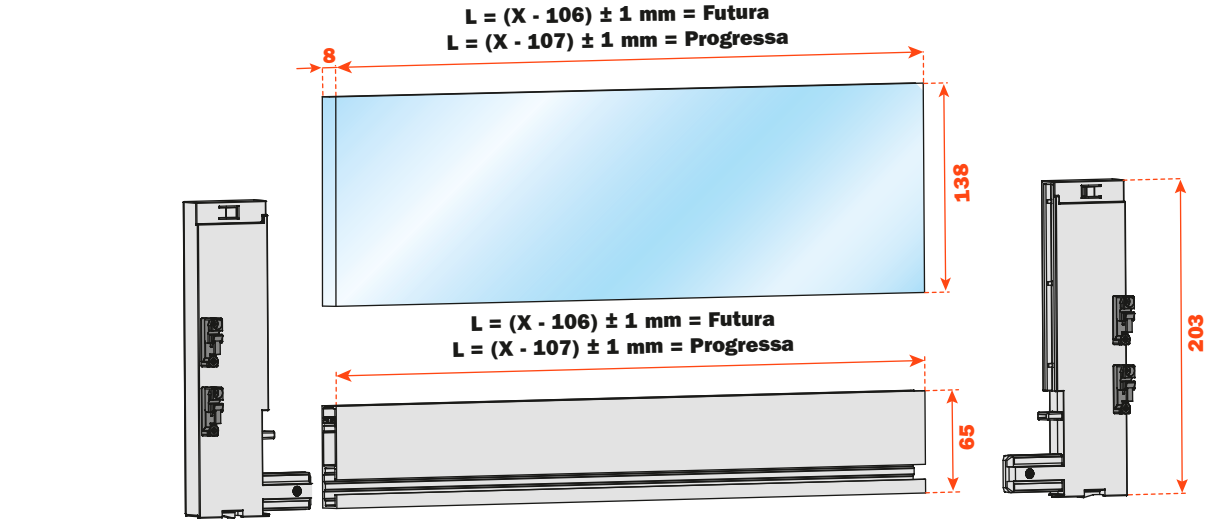

X = Internal width of the cabinet (Max. 1168 mm)

Insert the front panel adapters into the front panel and tighten the locking screws.
Frontal fixings are already premounted.

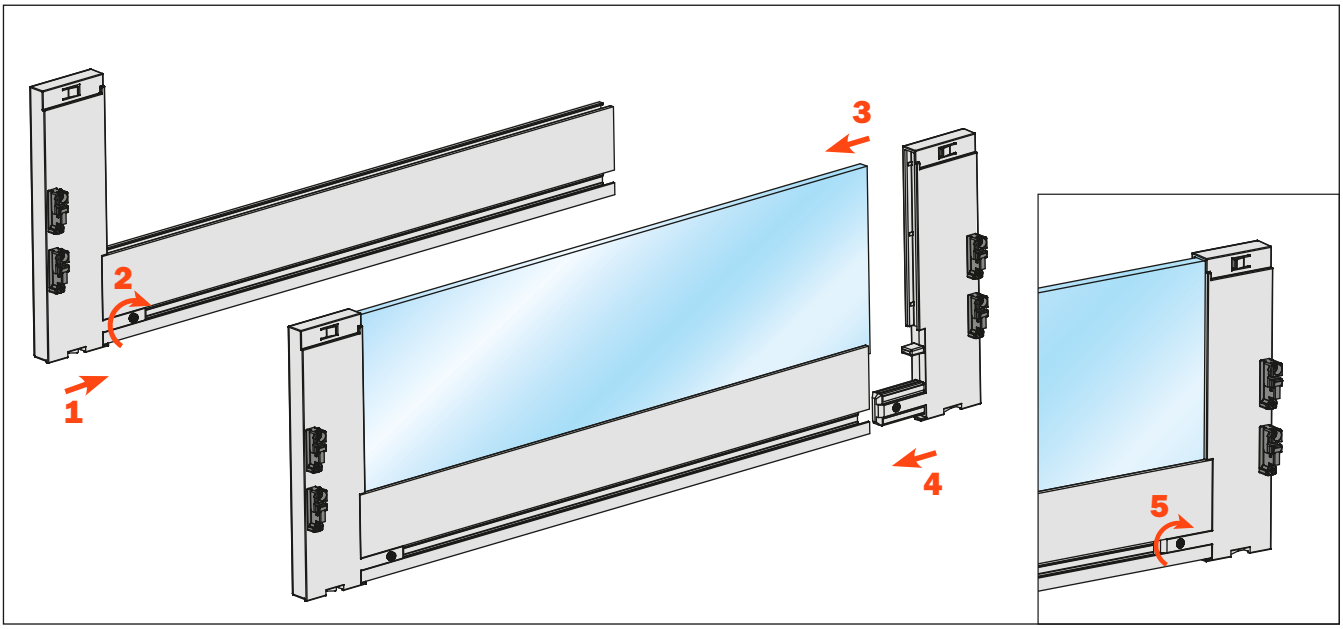

Fix the front panel to the drawer

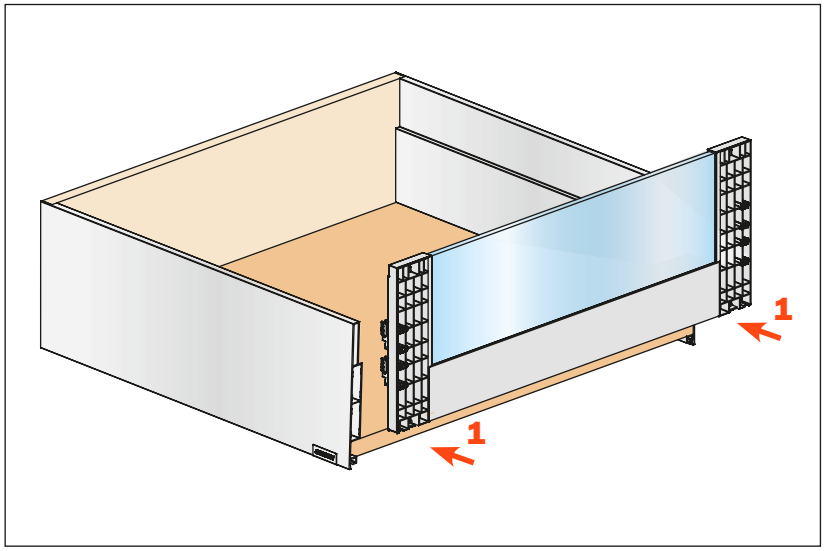

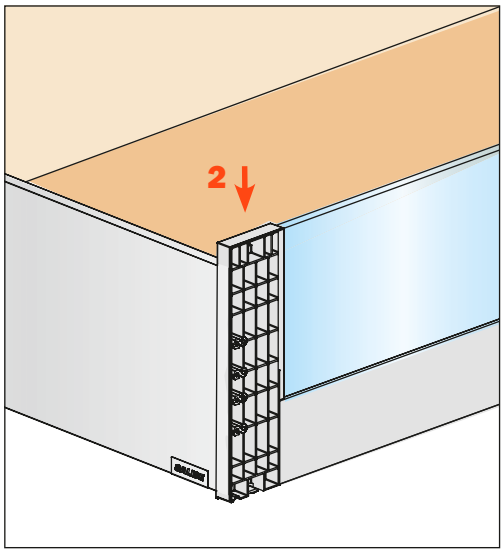

Fix the covers

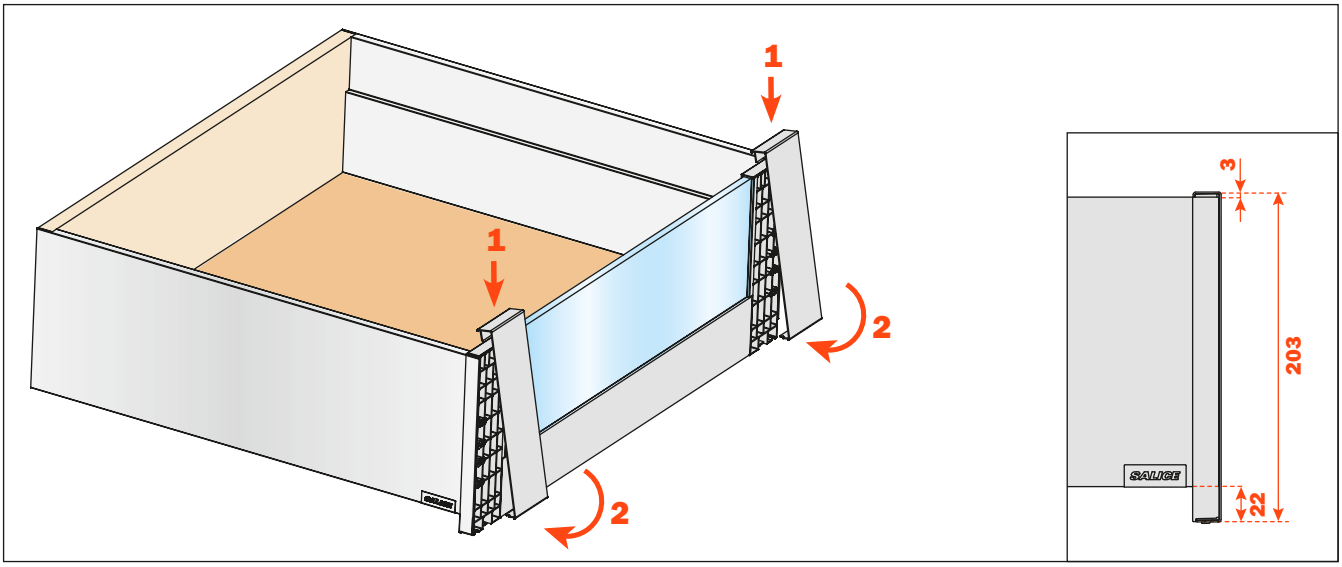

To correct any possible cutting errors of the panel, loosen and retighten the indicated screws

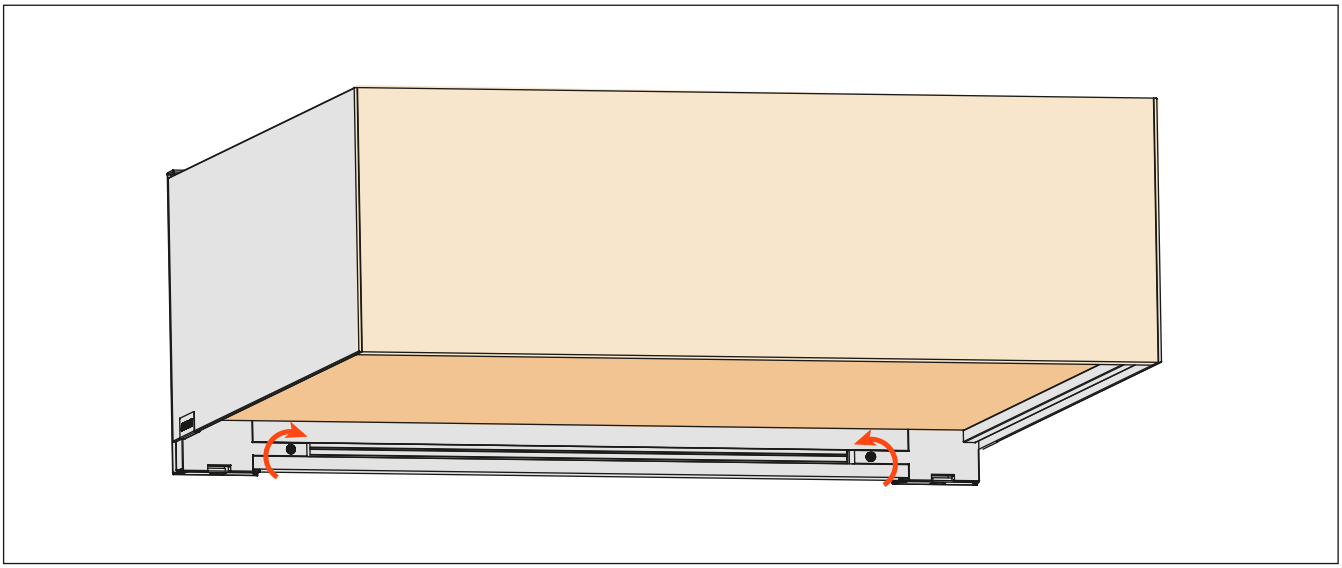

Lineabox Easy - Front panel for internal drawer - H 75 mm

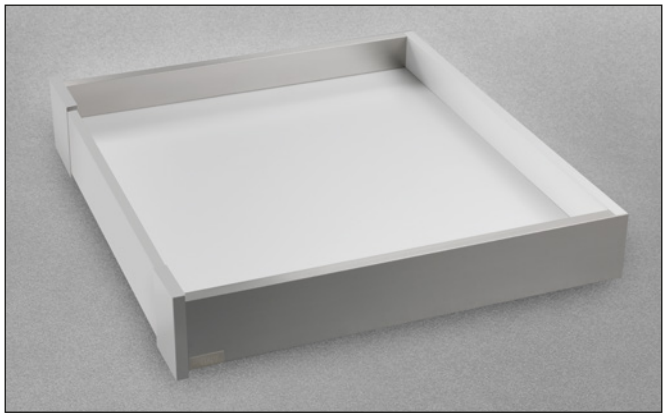

Height of Lineabox Easy side 75 mm.
Max. height of front panel 100 mm.
For use with Progressa and Futura full-extension runners.

- Included material:
  - aluminium for front panel
  - plastic for front panel adapters
  - metal for covers
- Complementary material:
  - Lineabox Easy: to choose between 2-Sided, 2-Sided - Inset Back and 3-Sided
- Rapid assembly system, with no machinery needed
- Frontal fixings are already premounted
- Rapid mounting and removal of front panel
- Finishes: White - Grey - Champagne - Stainless steel

Assembly details (The example shows the frontal assembled with Lineabox Easy 2-Sided)

Cut the front panel to length

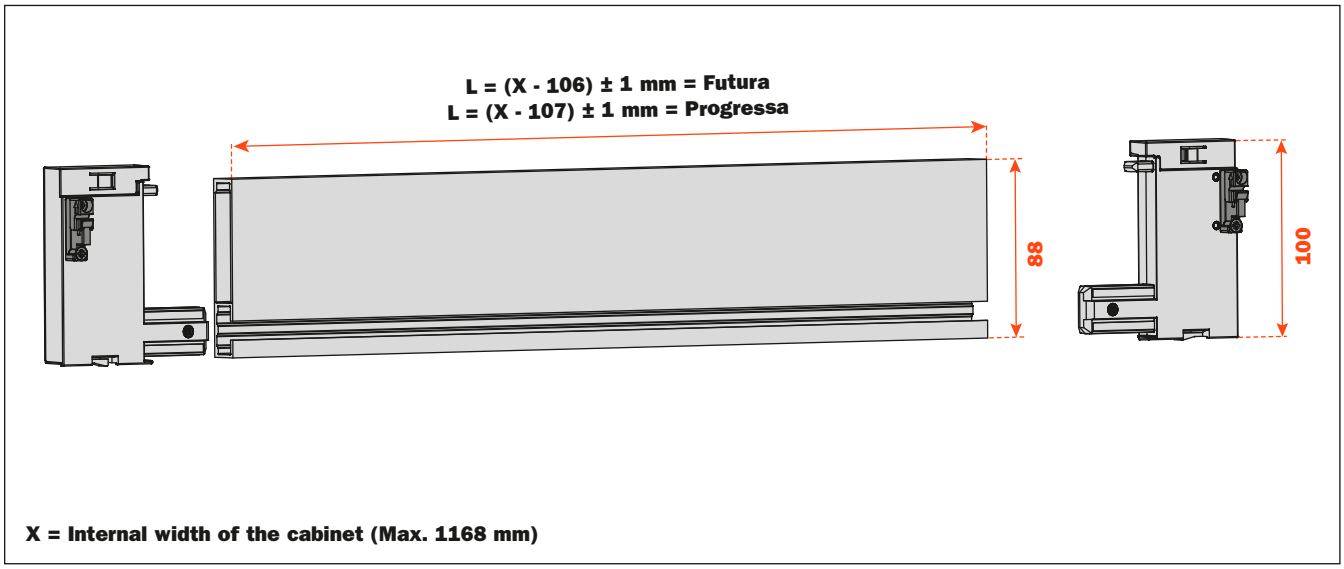

X = Internal width of the cabinet (Max. 1168 mm)

Insert the front panel adapters into the front panel and tighten the locking screws.
Frontal fixings are already premounted.

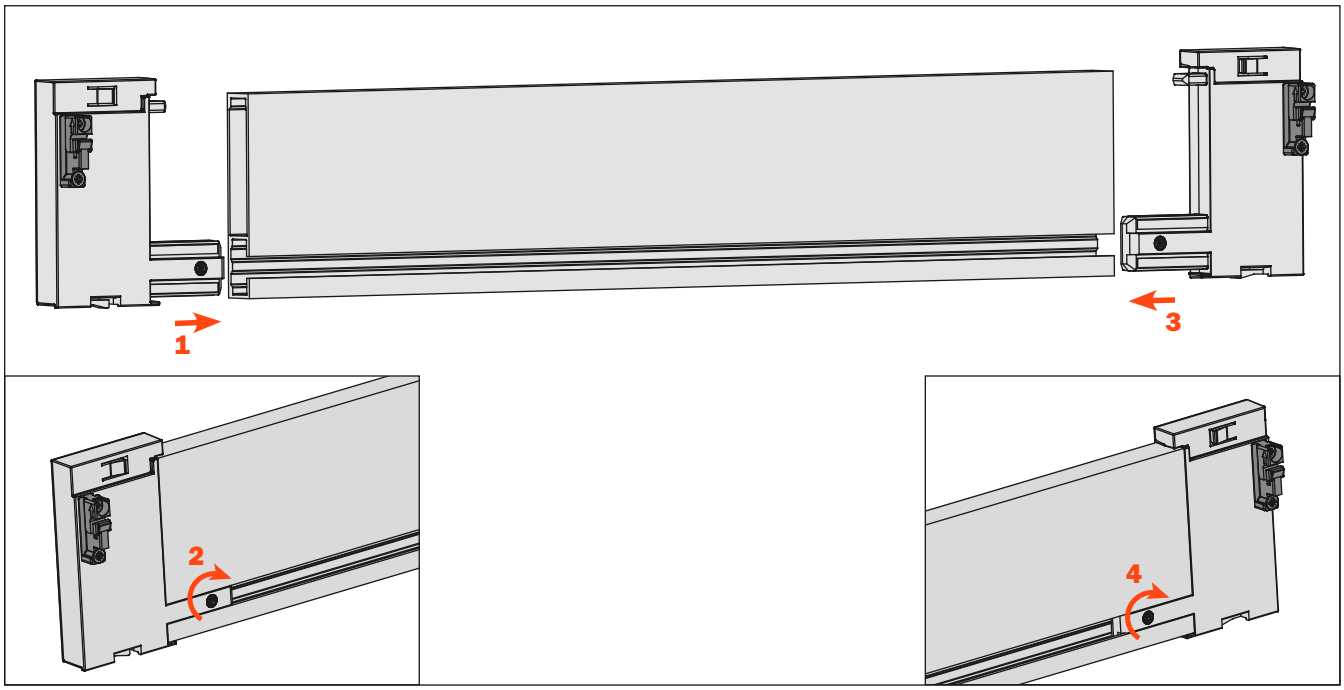

Fix the front panel to the drawer

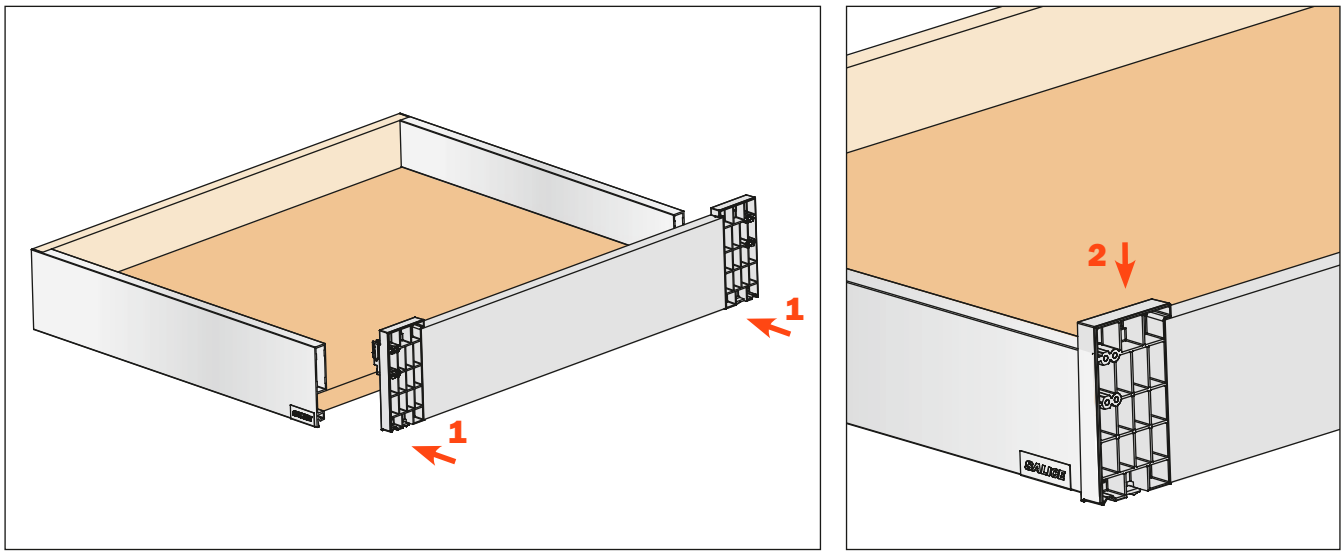

Fix the covers

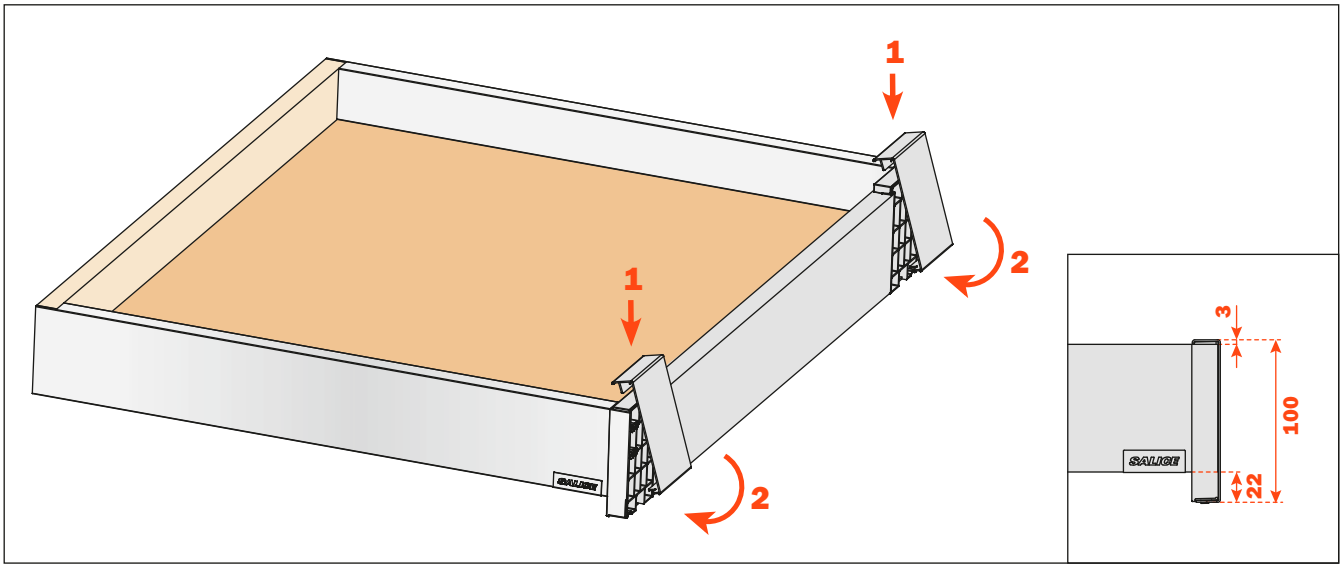

To correct any possible cutting errors of the panel, loosen and retighten the indicated screws

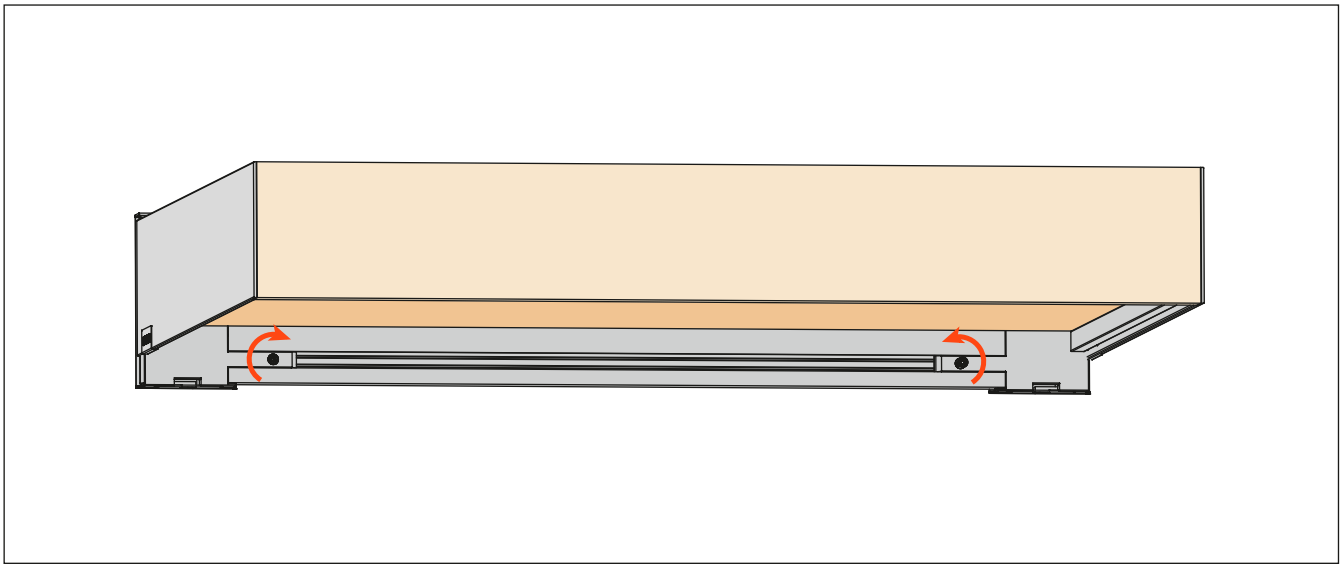

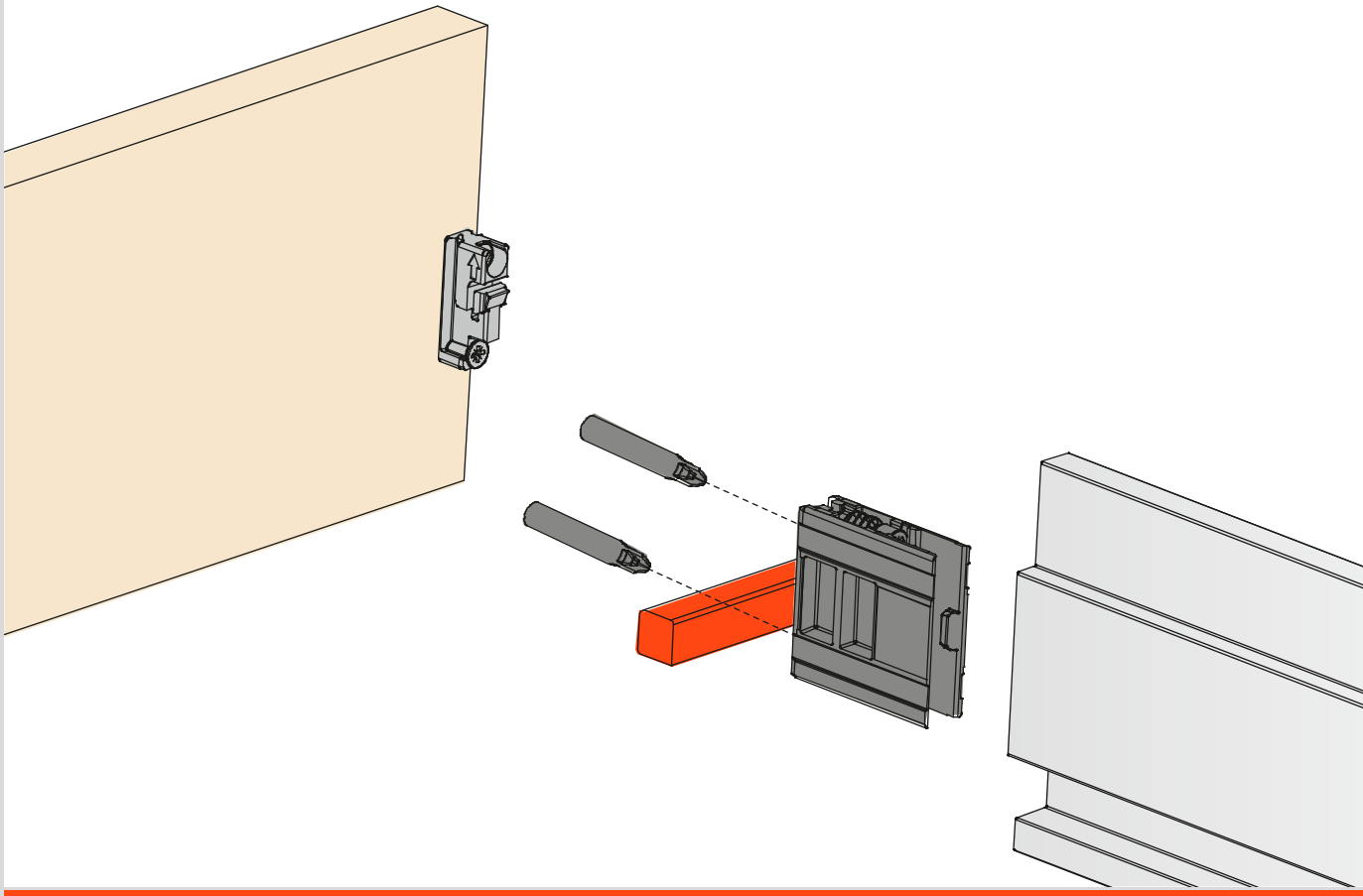

Assembly details

Lineabox Easy - 2-Sided - Assembly details

BACK

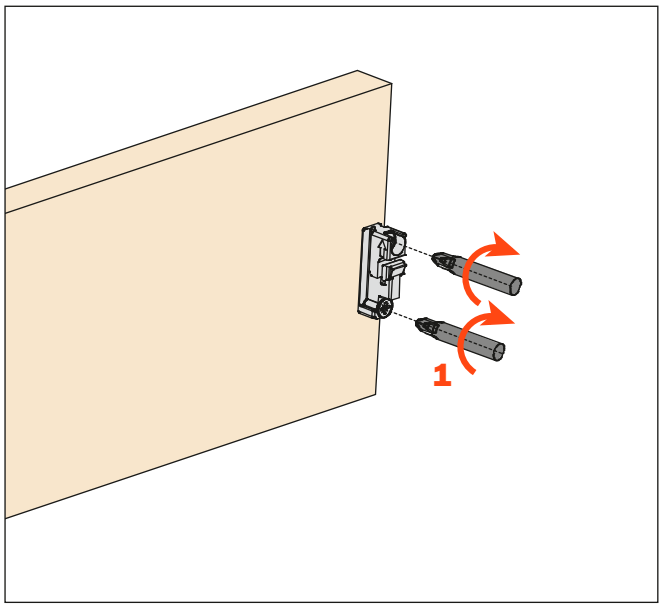

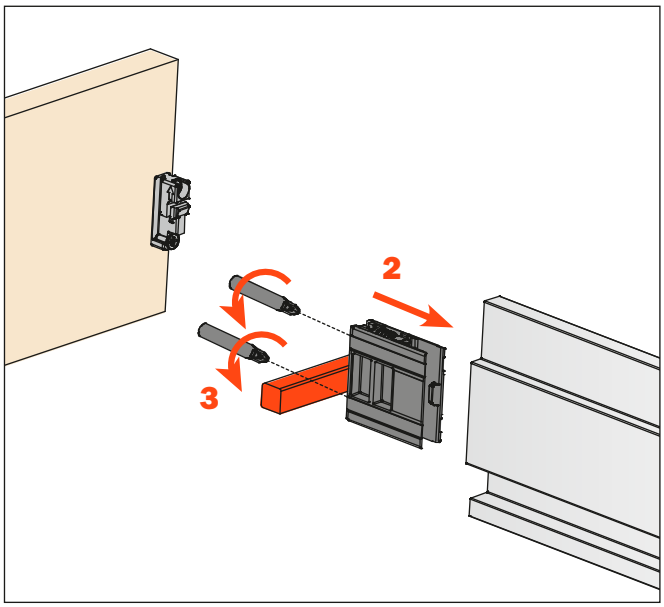

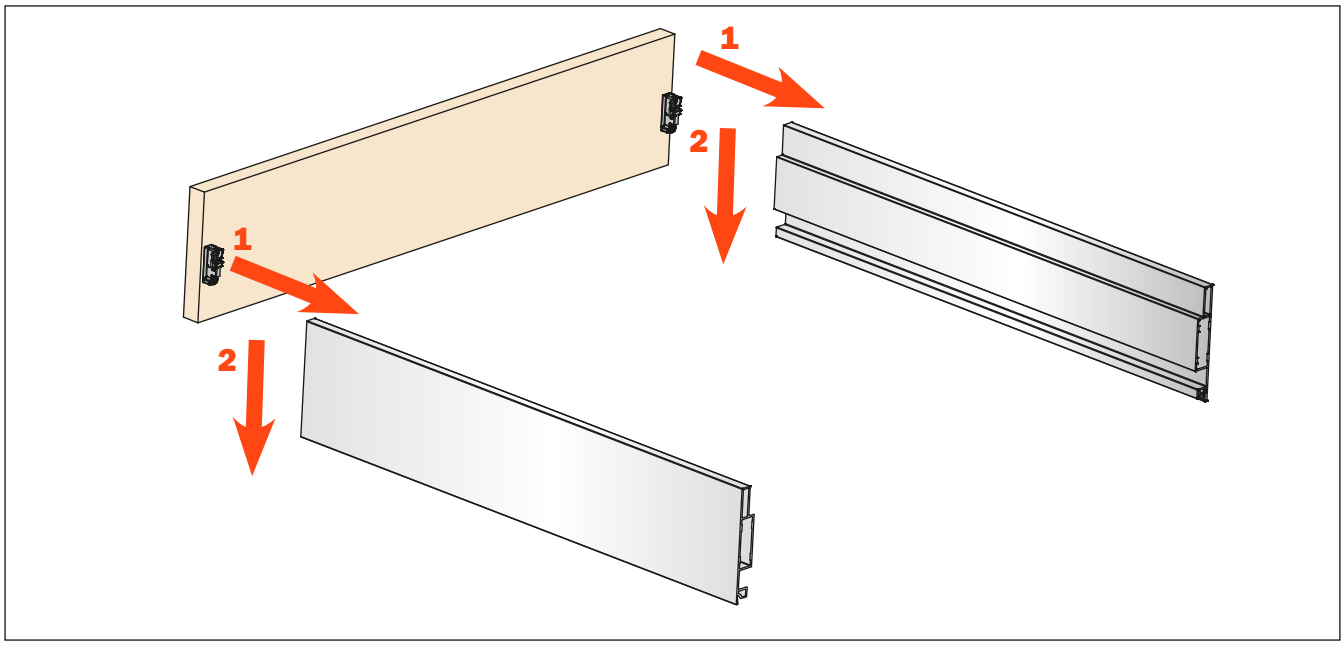

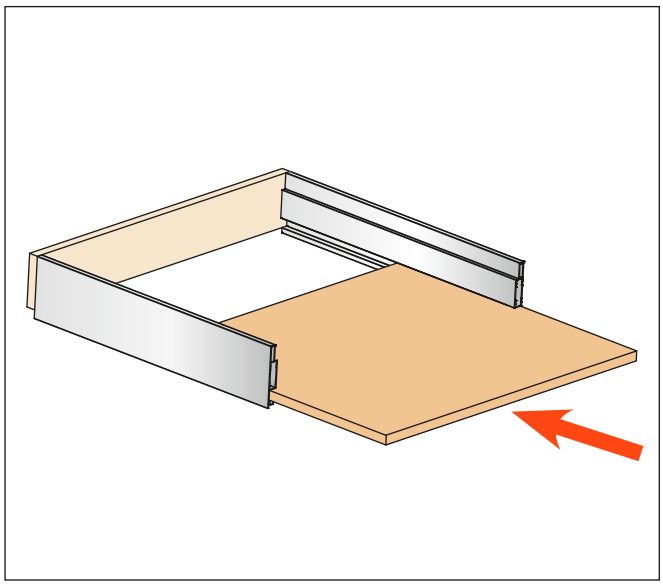

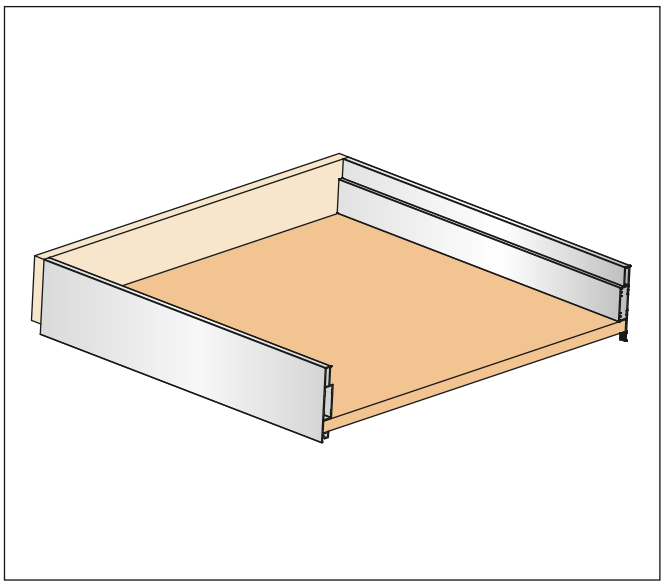

FRONT

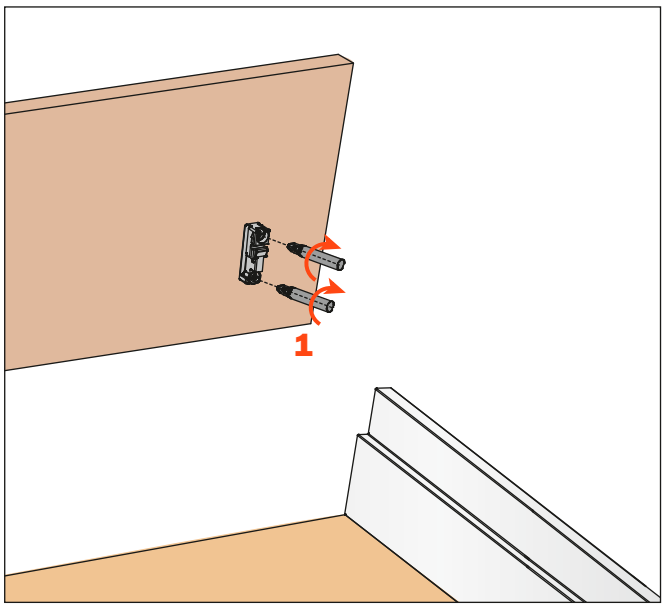

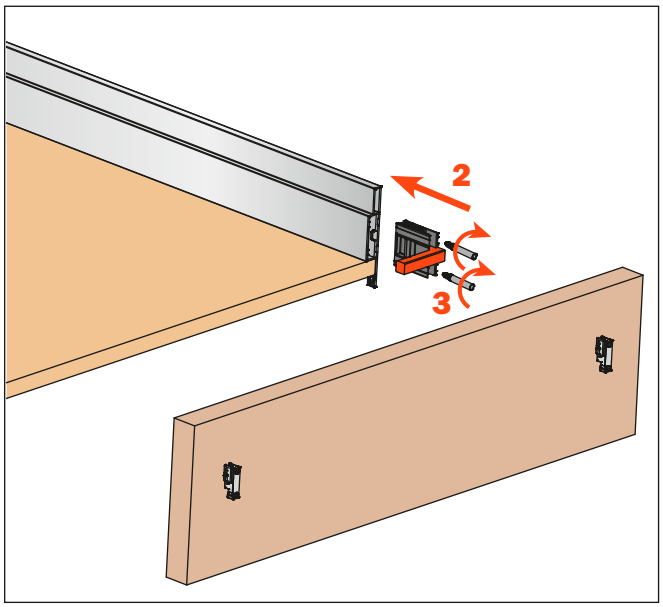

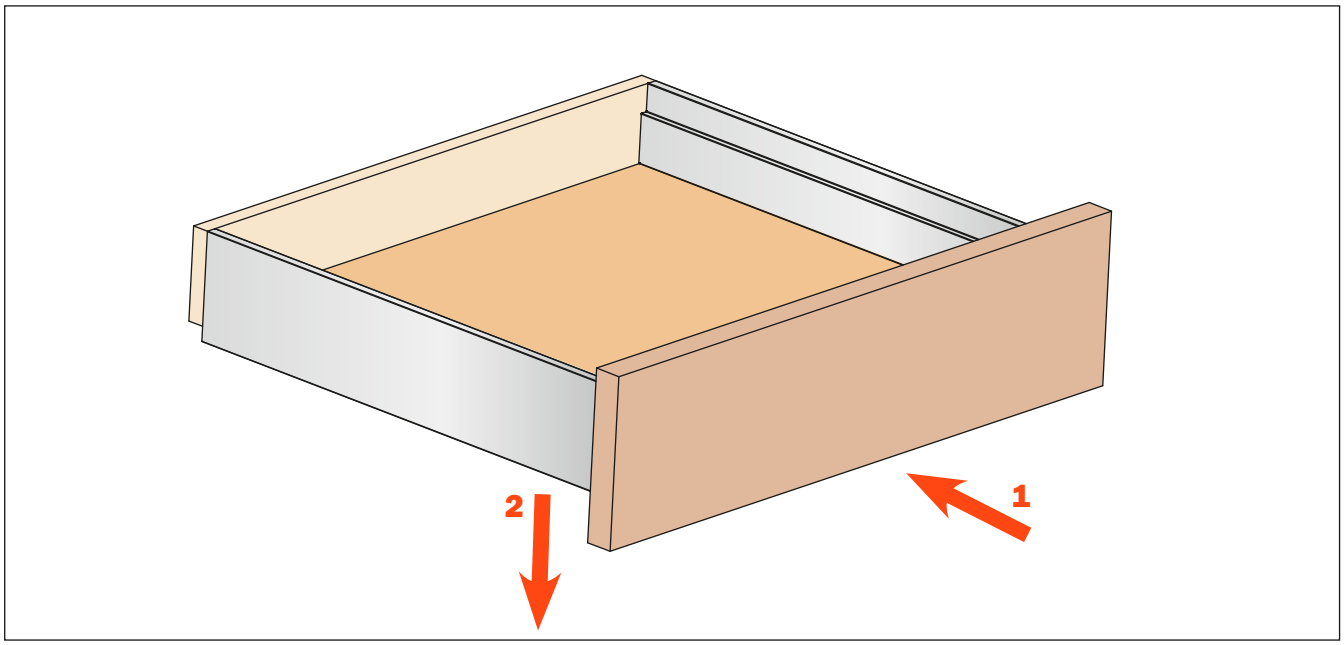

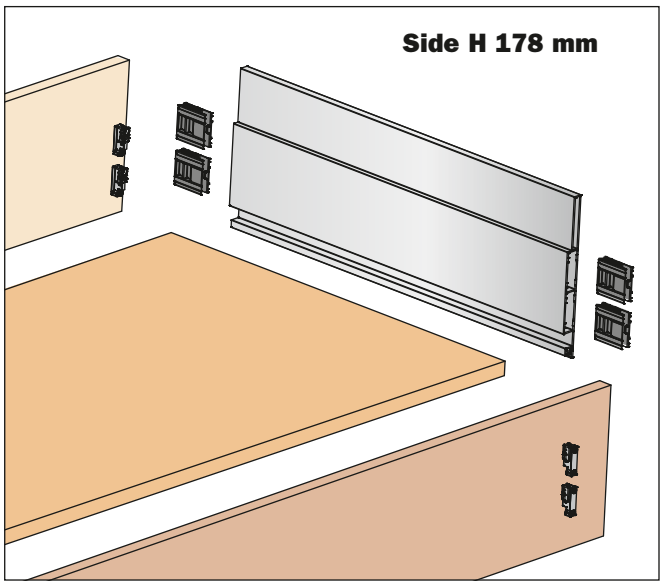

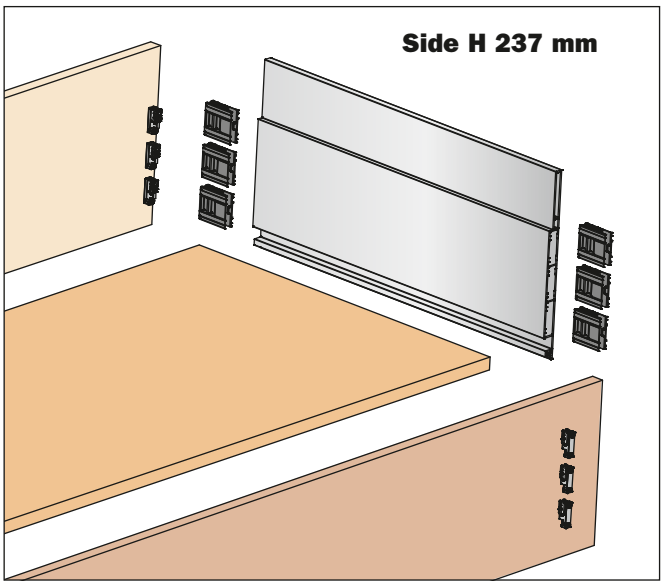

Lineabox Easy - 2-Sided - Inset Back - Assembly details

BACK

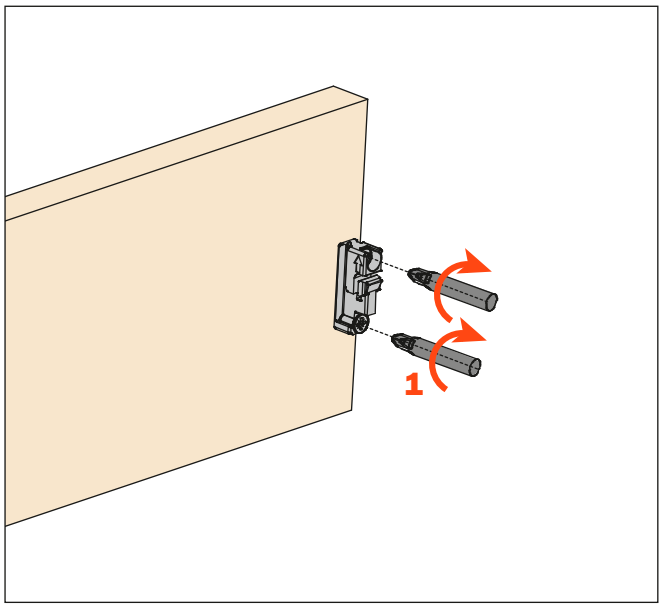

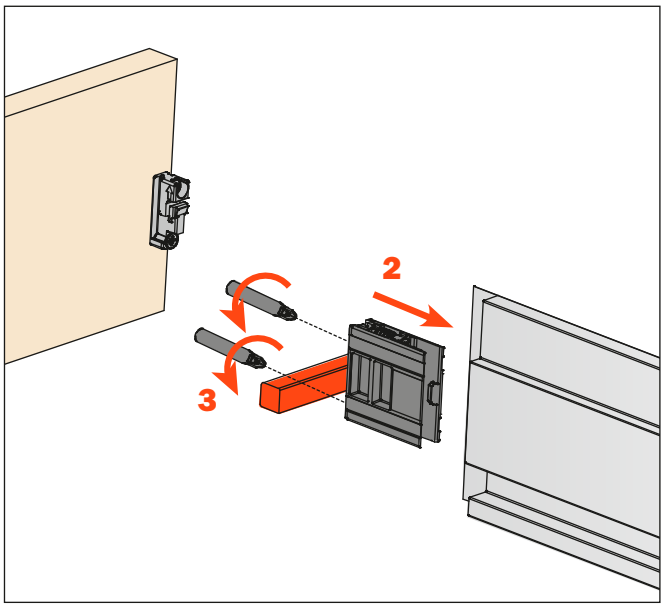

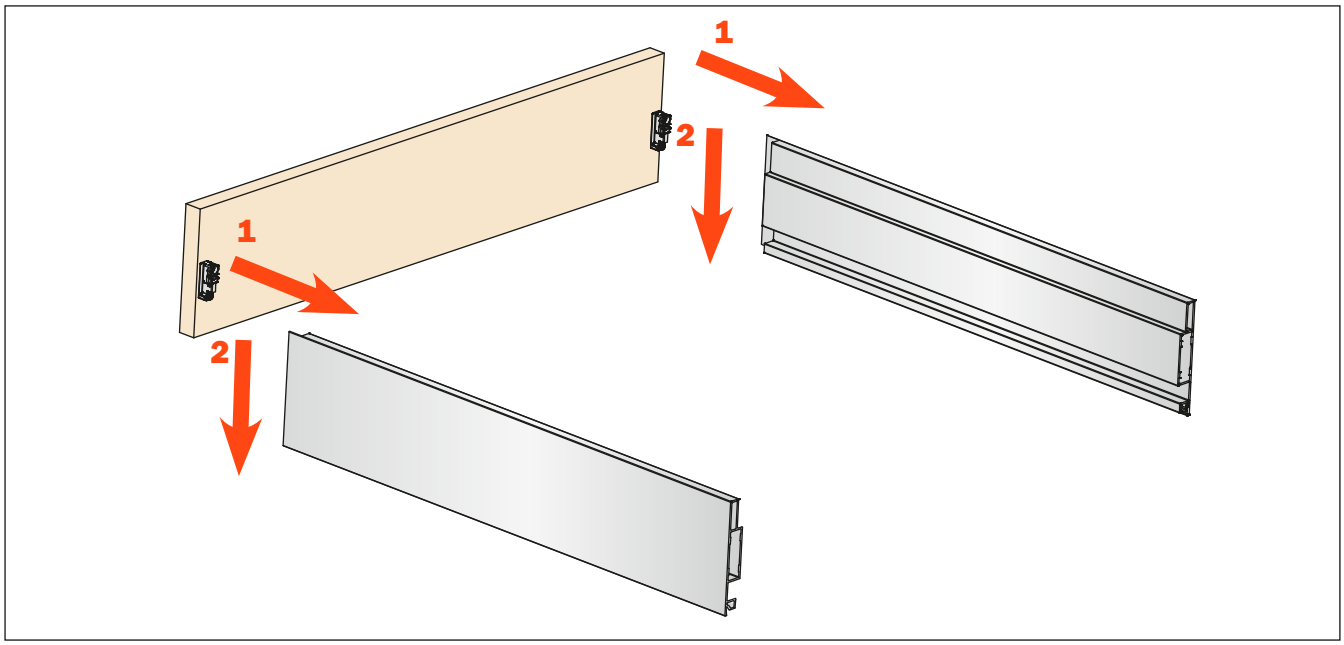

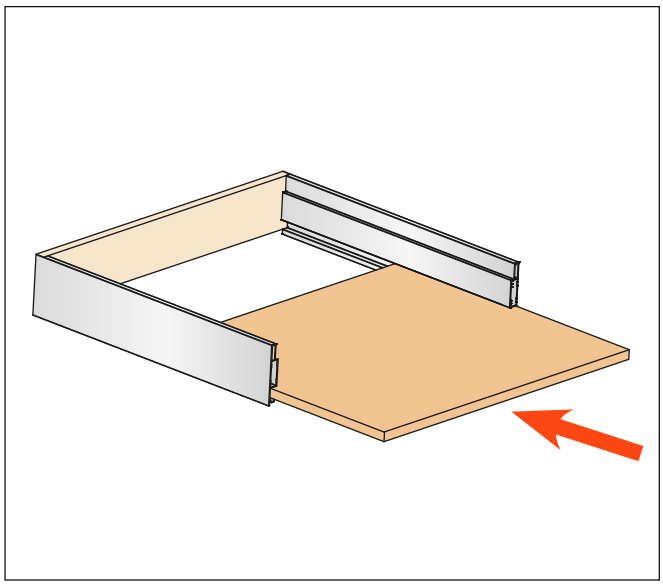

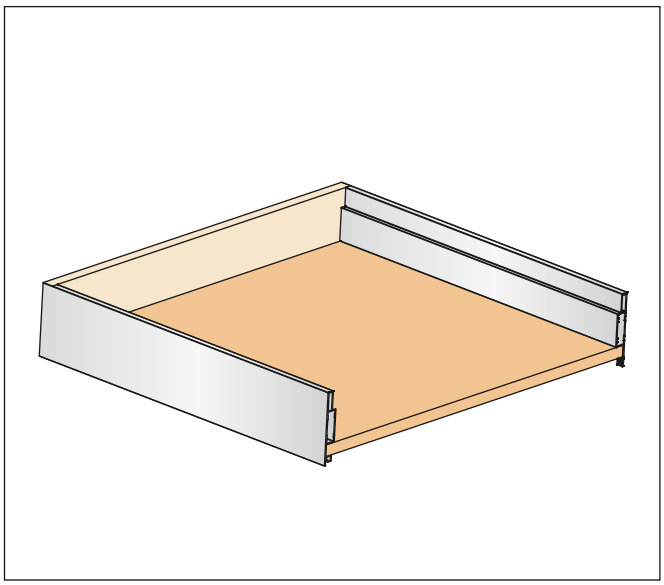

FRONT

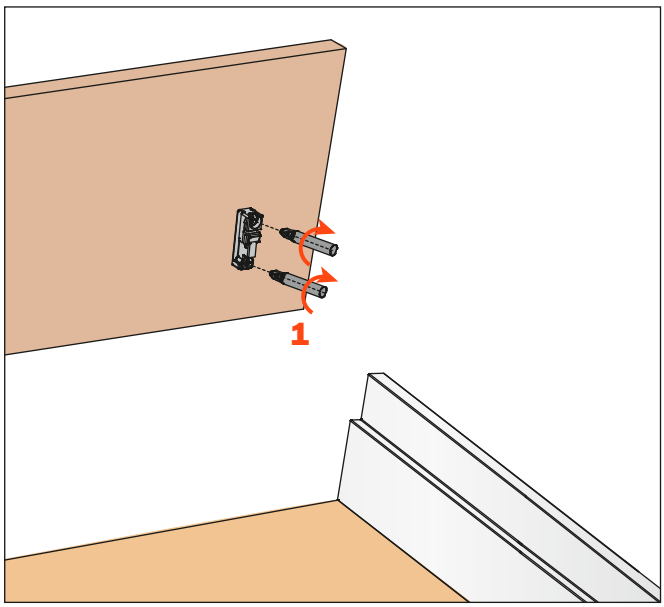

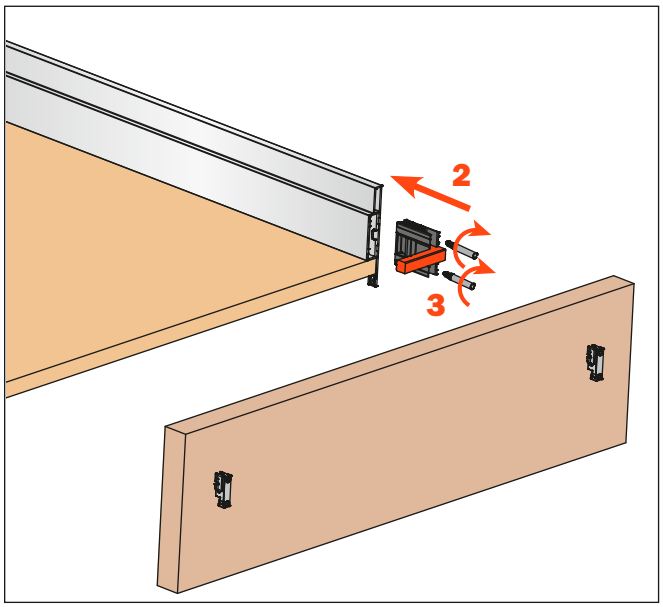

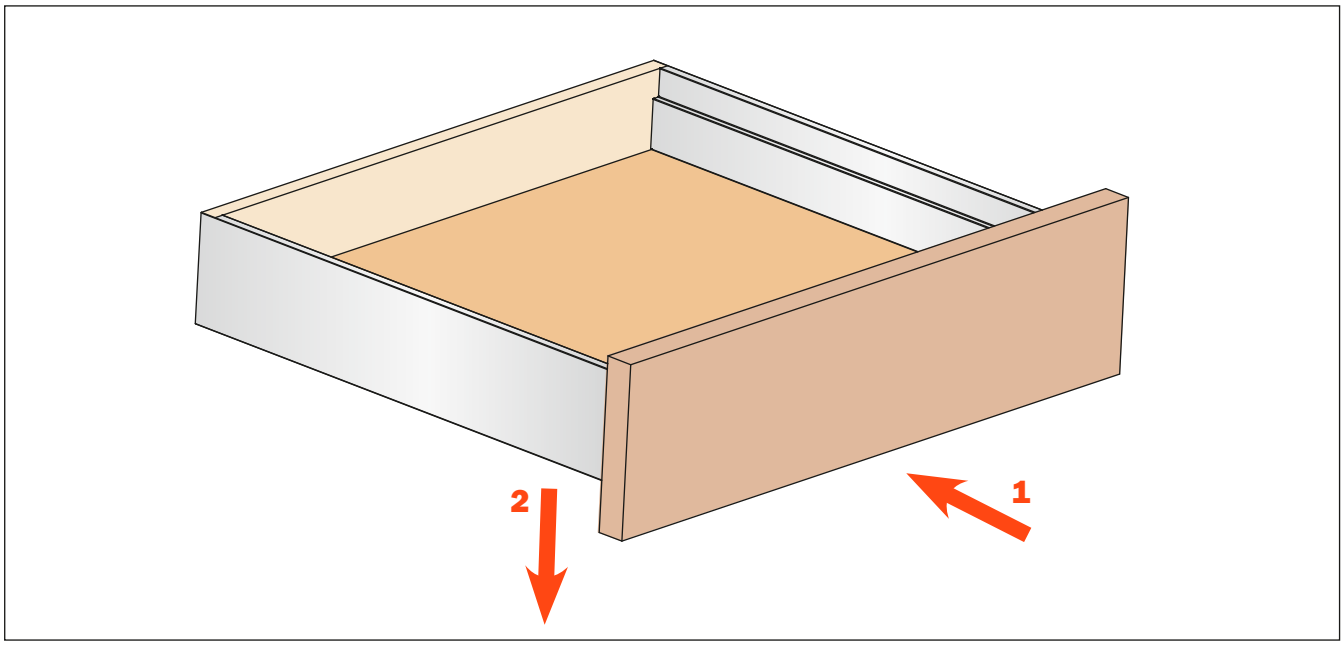

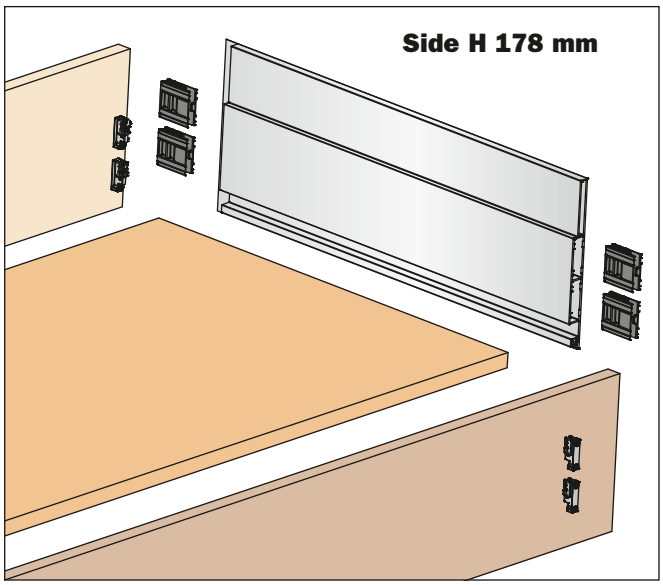

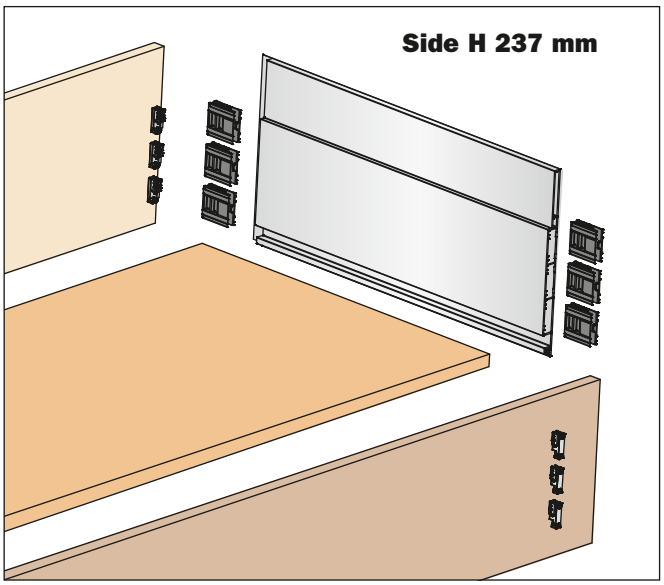

Lineabox Easy - 3-Sided - Assembly details

BACK

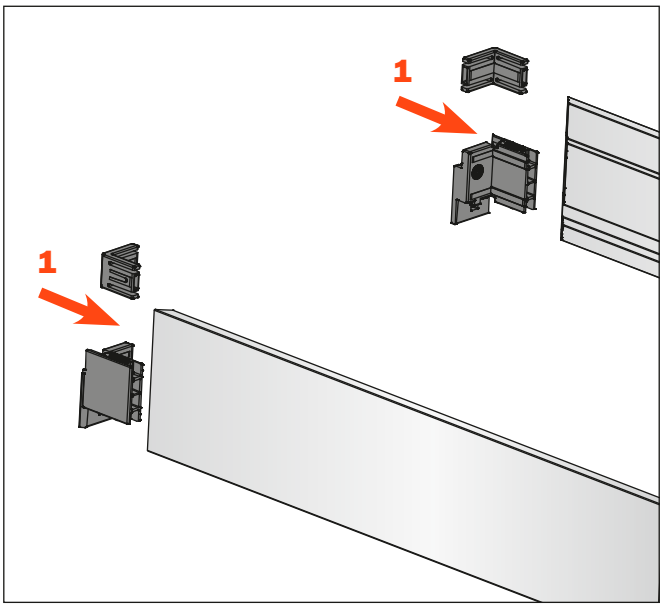

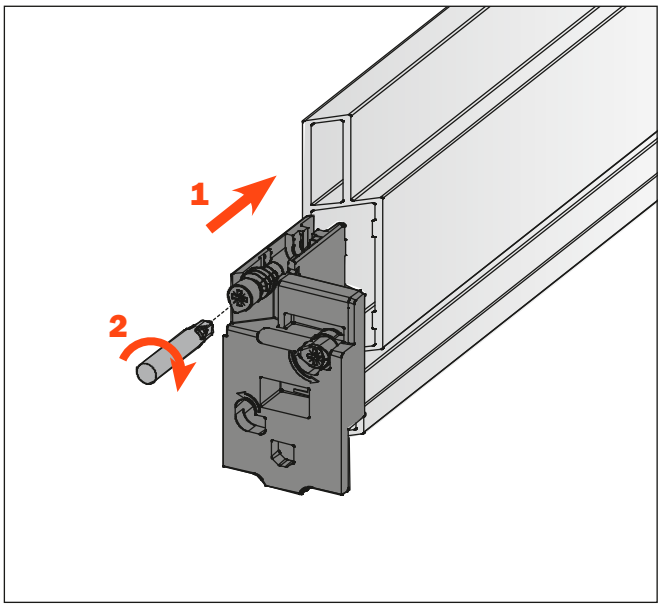

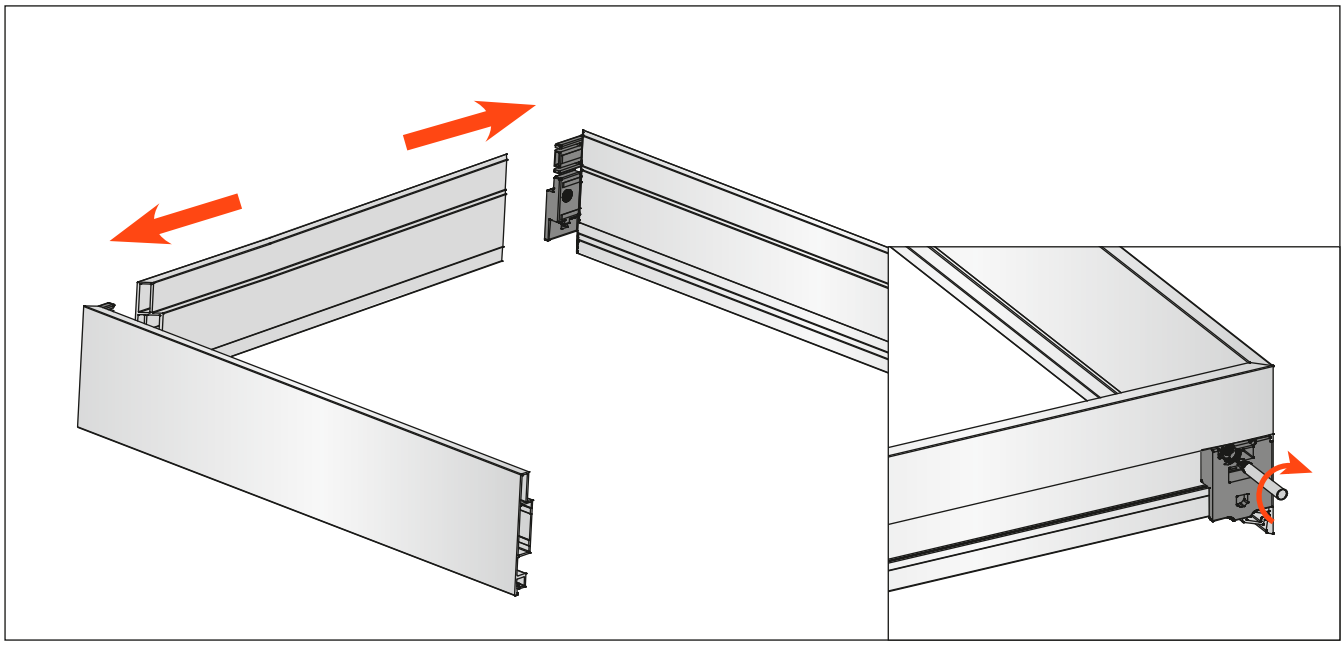

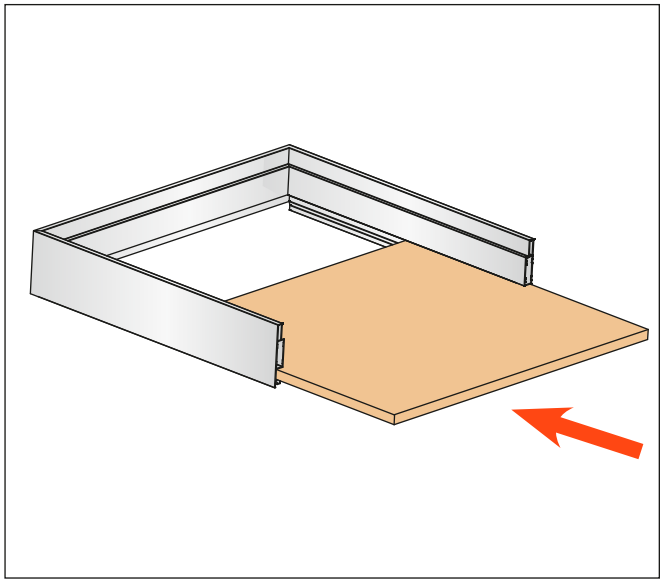

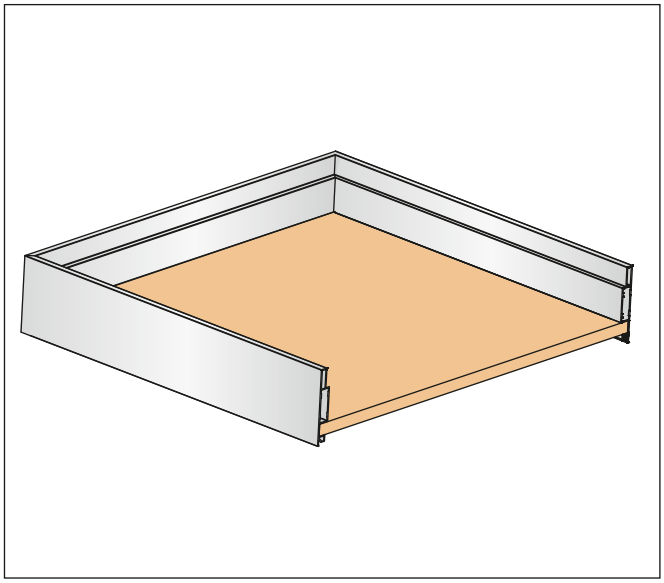

FRONT

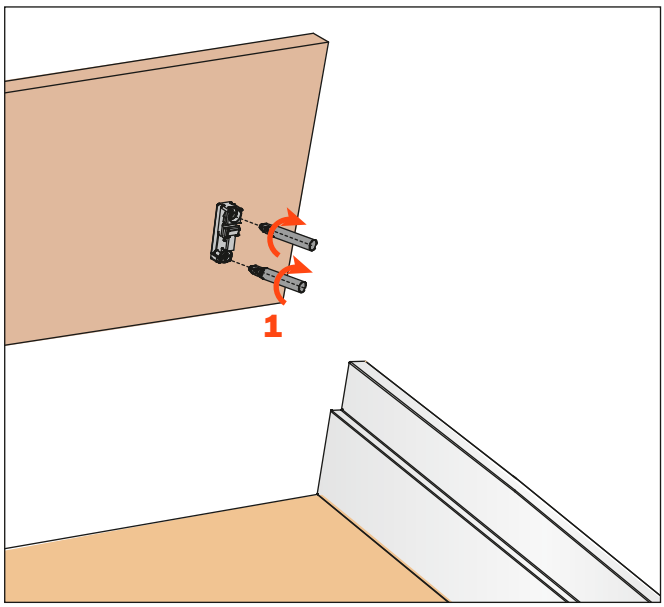

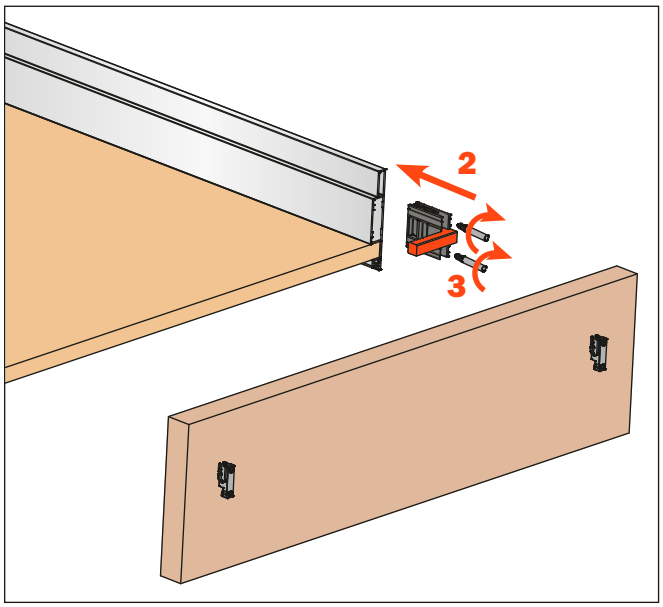

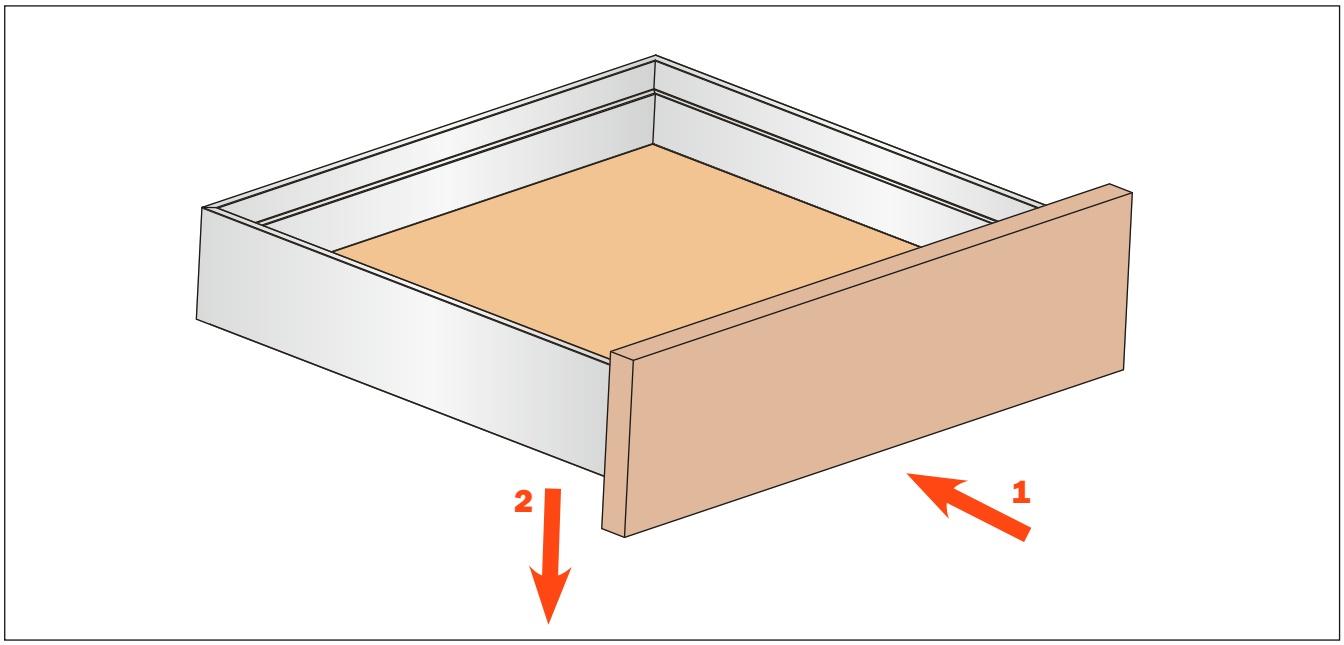

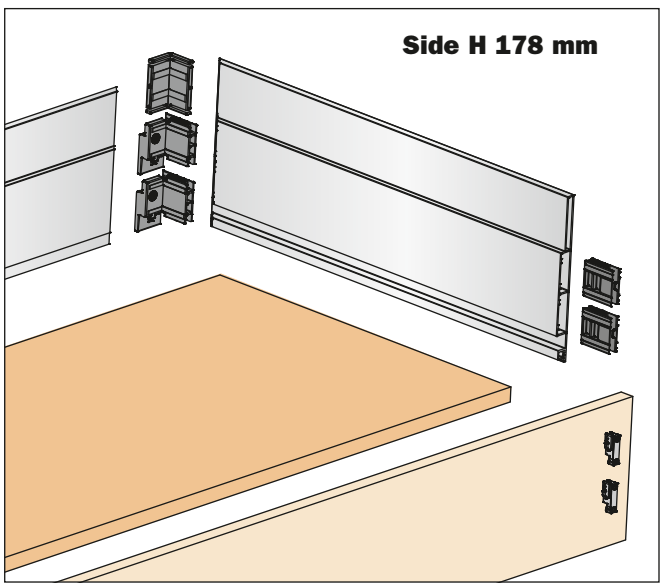

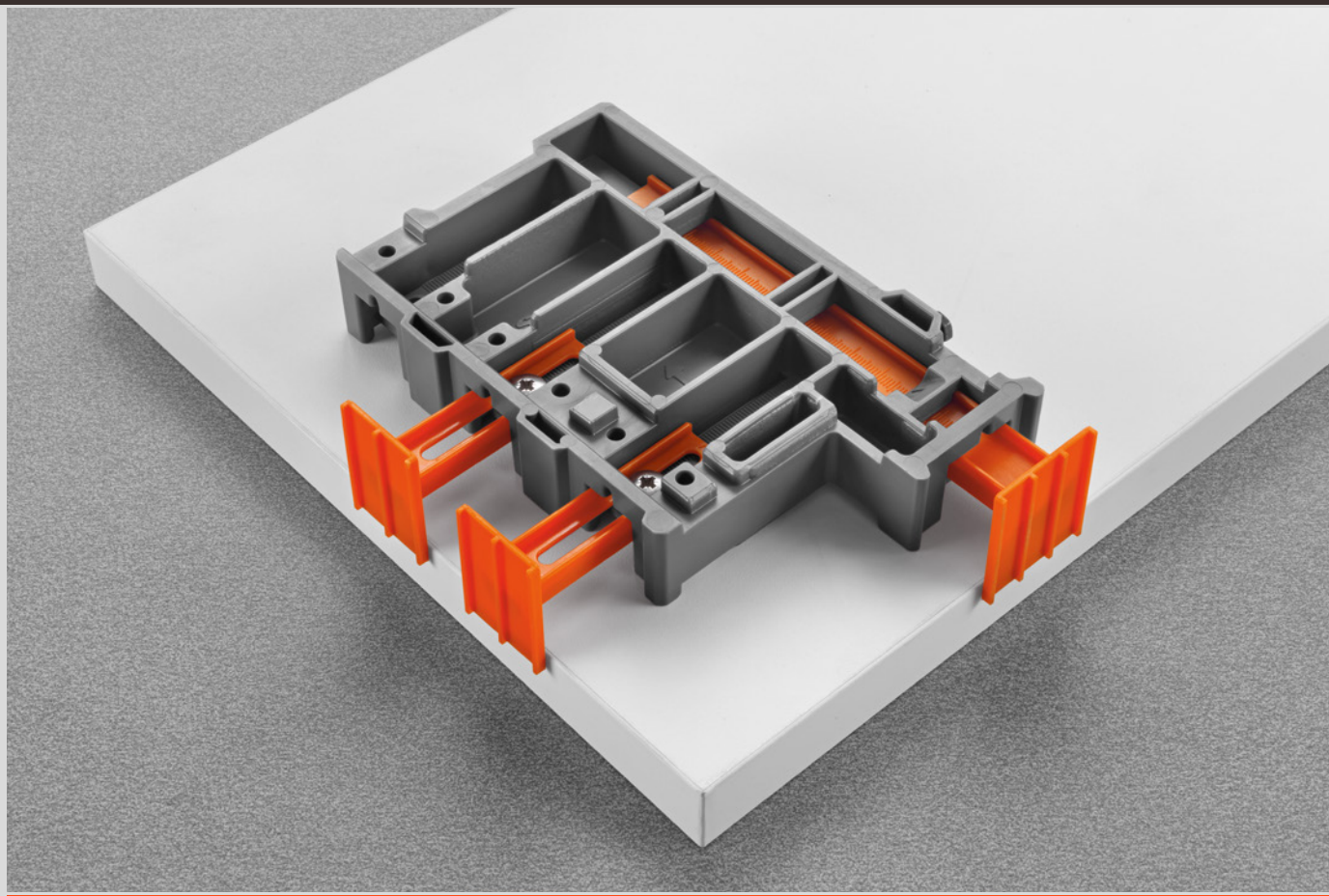

Accessories

Accessories

SCCX83H9 (Nickel-plated)
SCCX83H6 (Titanium)
Cover cap with embossed logo, it can be personalised on request.

SCXX83H9 (Nickel-plated)
Cover cap with silk-screen printed logo, it can be personalised on request.

AGDLXA6
Template for the drilling of the drawer frontal

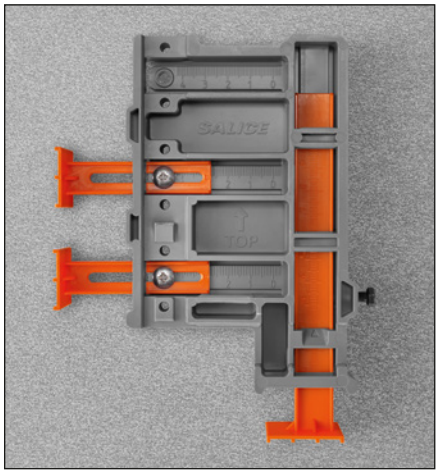

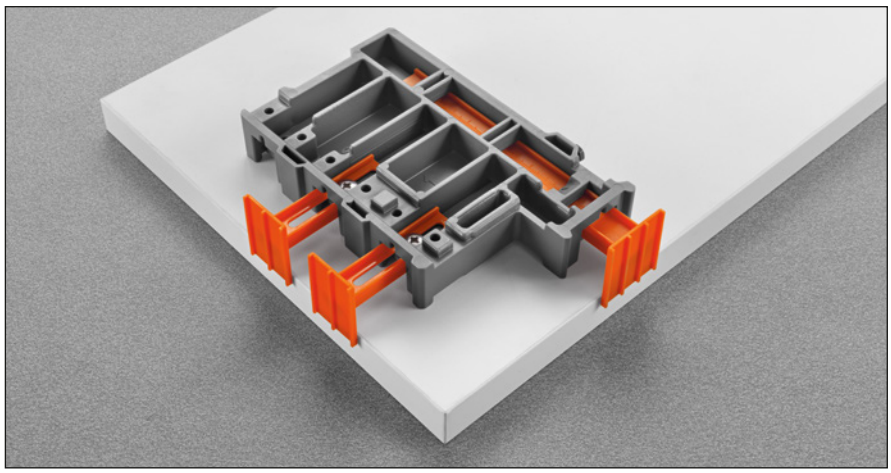

AMDGXAO
Template for frontal and back connecting fitting

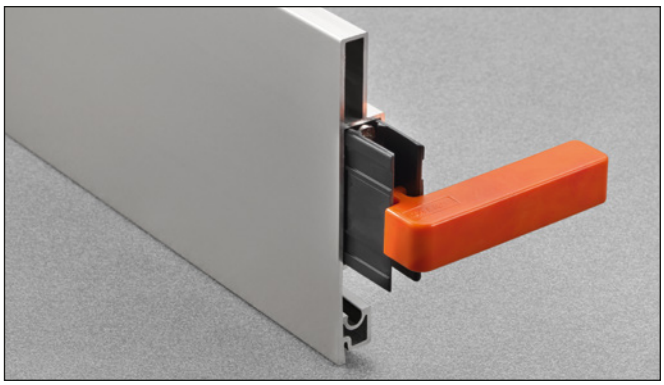

AMSRX33
Reinforcing supports for the bottom of the drawer

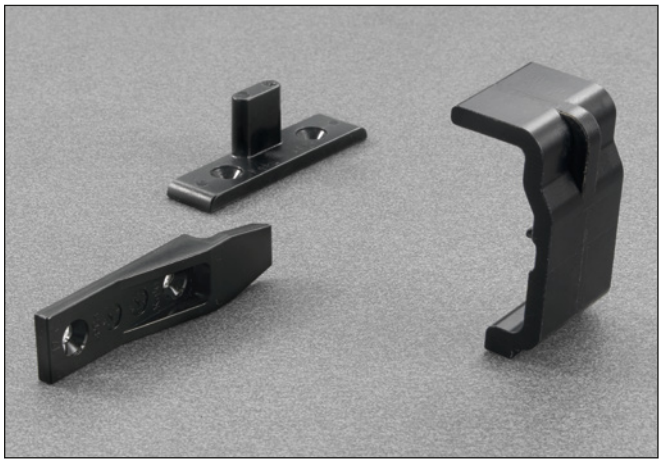

Packing and finishes

Packing - 2-Sided - Box of 12 SIDE PROFILES

Side profiles cut to length

SIDE PROFILE H 101 mm 2-SIDED DRAWER	PART NUMBER Without premounted connecting fittings	PART NUMBER With premounted connecting fittings	BOX	PALLET
Profile length ≤ 524 mm - 90° CUT END	AMRMX2_0XXX	AMRMX2_0XXXGE	12 pcs.	384 pcs.
Profile length > 524 mm - 90° CUT END				336 pcs.

SIDE PROFILE H 178 mm 2-SIDED DRAWER	PART NUMBER Without premounted connecting fittings	PART NUMBER With premounted connecting fittings	BOX	PALLET
Profile length ≤ 524 mm - 90° CUT END	AMRAX2_0XXX	AMRAX2_0XXXGE	12 pcs.	288 pcs.
Profile length > 524 mm - 90° CUT END				240 pcs.

SIDE PROFILE H 237 mm 2-SIDED DRAWER	PART NUMBER Without premounted connecting fittings	PART NUMBER With premounted connecting fittings	BOX	PALLET
Profile length ≤ 524 mm - 90° CUT END	AMRHX2_0XXX	AMRHX2_0XXXGE	12 pcs.	192 pcs.
Profile length > 524 mm - 90° CUT END				144 pcs.

SIDE PROFILE H 75 mm 2-SIDED DRAWER	PART NUMBER Without premounted connecting fittings	PART NUMBER With premounted connecting fittings	BOX	PALLET
Profile length ≤ 524 mm - 90° CUT END	AMRBX2_0XXX	AMRBX2_0XXXGE	12 pcs.	384 pcs.
Profile length > 524 mm - 90° CUT END				336 pcs.

Part number composition without premounted frontal and back connecting fittings (example):

A M R B X 2 G 0 X X X

1 = White G = Grey C = Champagne S = Stainless steel	Runner length - 10 - **S**

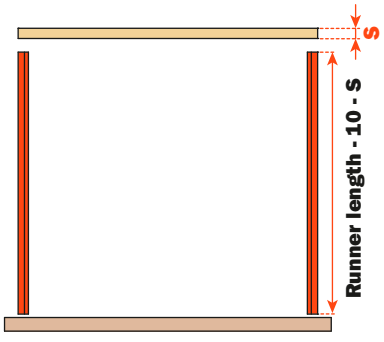

Part number composition with premounted frontal and back connecting fittings (example):

A M R B X 2 G 0 X X X G E

1 = White G = Grey C = Champagne S = Stainless steel	Runner length - 10 - **S**	Premounted connecting fittings

Packing - 2-Sided - Inset Back - Box of 12 SIDE PROFILES

Right and left side profiles cut to length

SIDE PROFILE H 101 mm 2-SIDED DRAWER	PART NUMBER Without premounted connecting fittings	PART NUMBER With premounted connecting fittings	BOX	PALLET
Profile length ≤ 524 mm - 90° CUT END	AMRM_X_0XXX	AMRM_X_0XXXGE	1 BOX = 12 pcs. right	384 pcs.
Profile length > 524 mm - 90° CUT END			1 BOX = 12 pcs. left	336 pcs.

SIDE PROFILE H 178 mm 2-SIDED DRAWER	PART NUMBER Without premounted connecting fittings	PART NUMBER With premounted connecting fittings	BOX	PALLET
Profile length ≤ 524 mm - 90° CUT END	AMRA_X_0XXX	AMRA_X_0XXXGE	1 BOX = 12 pcs. right	288 pcs.
Profile length > 524 mm - 90° CUT END			1 BOX = 12 pcs. left	240 pcs.

SIDE PROFILE H 237 mm 2-SIDED DRAWER	PART NUMBER Without premounted connecting fittings	PART NUMBER With premounted connecting fittings	BOX	PALLET
Profile length ≤ 524 mm - 90° CUT END	AMRH_X_0XXX	AMRH_X_0XXXGE	1 BOX = 12 pcs. right	192 pcs.
Profile length > 524 mm - 90° CUT END			1 BOX = 12 pcs. left	144 pcs.

SIDE PROFILE H 75 mm 2-SIDED DRAWER	PART NUMBER Without premounted connecting fittings	PART NUMBER With premounted connecting fittings	BOX	PALLET
Profile length ≤ 524 mm - 90° CUT END	AMRB_X_0XXX	AMRB_X_0XXXGE	1 BOX = 12 pcs. right	384 pcs.
Profile length > 524 mm - 90° CUT END			1 BOX = 12 pcs. left	336 pcs.

Part number composition without premounted frontal and back connecting fittings (example):

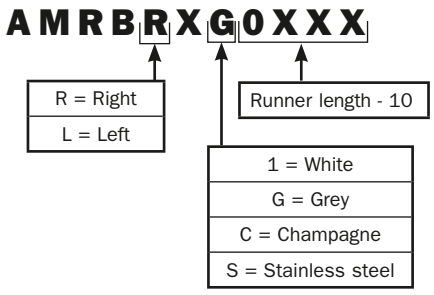

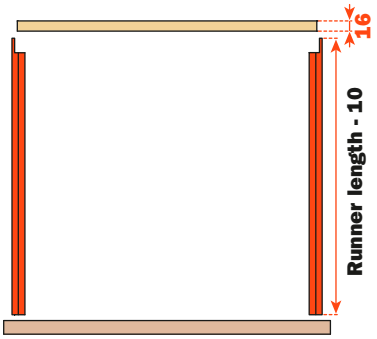

Part number composition with premounted frontal and back connecting fittings (example):

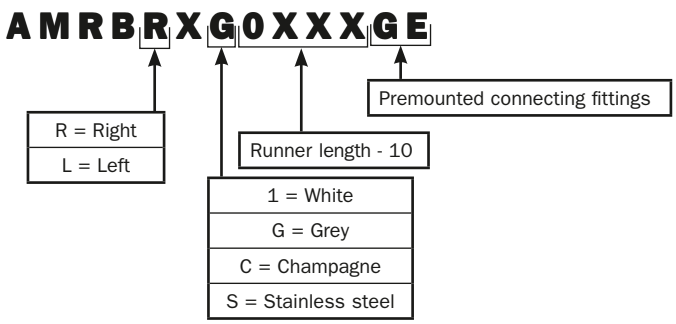

Packing - 3-Sided - Box of 12 SIDE PROFILES

Right and left side profiles cut to length

SIDE PROFILE H 101 mm 3-SIDED DRAWER	PART NUMBER	BOX	PALLET
Profile length ≤ 524 mm - 45° MITRE CUT END	AMRM_3_0XXX	1 BOX = 12 pcs. right	384 pcs.
Profile length > 524 mm - 45° MITRE CUT END		1 BOX = 12 pcs. left	336 pcs.

SIDE PROFILE H 178 mm 3-SIDED DRAWER	PART NUMBER	BOX	PALLET
Profile length ≤ 524 mm - 45° MITRE CUT END	AMRA_3_0XXX	1 BOX = 12 pcs. right	288 pcs.
Profile length > 524 mm - 45° MITRE CUT END		1 BOX = 12 pcs. left	240 pcs.

SIDE PROFILE H 75 mm 3-SIDED DRAWER	PART NUMBER	BOX	PALLET
Profile length ≤ 524 mm - 45° MITRE CUT END	AMRB_3_0XXX	1 BOX = 12 pcs. right	384 pcs.
Profile length > 524 mm - 45° MITRE CUT END		1 BOX = 12 pcs. left	336 pcs.

Part number composition (example):

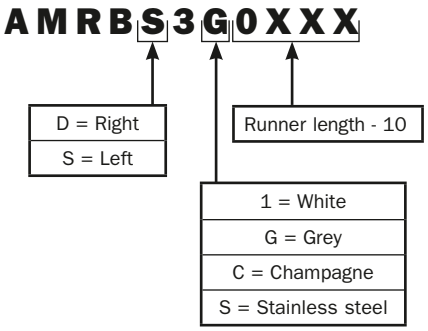

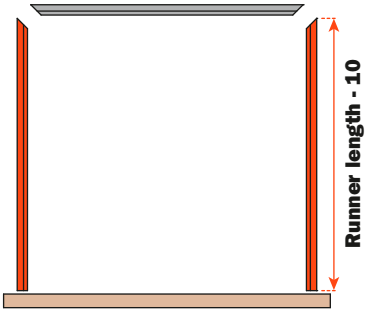

Packing - 3-Sided - Box of 12 BACK PROFILES

Back profiles cut to length

BACK PROFILE H 101 mm 3-SIDED DRAWER	PART NUMBER	BOX	PALLET
Profile length ≤ 524 mm - 45° MITRE CUT END	AMPMX3_XXXX	12 pcs.	384 pcs.
Profile length > 524 mm - 45° MITRE CUT END			336 pcs.

BACK PROFILE H 178 mm 3-SIDED DRAWER	PART NUMBER	BOX	PALLET
Profile length ≤ 524 mm - 45° MITRE CUT END	AMPAX3_XXXX	12 pcs.	288 pcs.
Profile length > 524 mm - 45° MITRE CUT END			240 pcs.

BACK PROFILE H 75 mm 3-SIDED DRAWER	PART NUMBER	BOX	PALLET
Profile length ≤ 524 mm - 45° MITRE CUT END	AMPBX3_XXXX	12 pcs.	384 pcs.
Profile length > 524 mm - 45° MITRE CUT END			336 pcs.

Part number composition (example):

A M P B X 3 G X X X X

Back profile = x (internal width of the cabinet) - 18 = Futura
Back profile = x (internal width of the cabinet) - 19 = Progressa

1 = White
G = Grey
C = Champagne
S = Stainless steel

x (internal width of the cabinet) - 18 = Futura
x (internal width of the cabinet) - 19 = Progressa

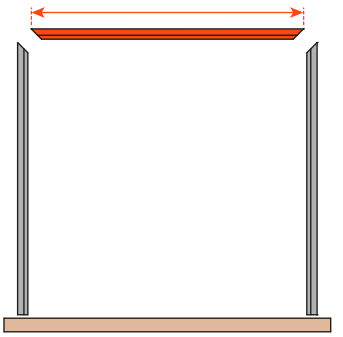

Minimum order quantity: 10 boxes for each dimension

Packing - 2-Sided - Kit (single packing)

Contains everything necessary to assemble 1 drawer

- 2 side profiles with premounted frontal and back connecting fittings
- frontal and back fixings, screws
- 1 pair of **Progressa Smove** runners for lengths from 250 to 550 mm
- 1 pair of **Progressa+ Smove** runners for lengths from 350 to 750 mm
- 1 pair of fixing clips

SIDE PROFILE H 101 mm 2-SIDED DRAWER	PART NUMBER	BOX	PALLET
Profile length up to 600 mm	**AM_7M5_0XXXE**	a single drawer	40 pcs.

SIDE PROFILE H 178 mm 2-SIDED DRAWER	PART NUMBER	BOX	PALLET
Profile length up to 600 mm	**AM_7A5_0XXXE**	a single drawer	40 pcs.

SIDE PROFILE H 237 mm 2-SIDED DRAWER	PART NUMBER	BOX	PALLET
Profile length up to 600 mm	**AM_7H5_0XXXE**	a single drawer	40 pcs.

SIDE PROFILE H 75 mm 2-SIDED DRAWER	PART NUMBER	BOX	PALLET
Profile length up to 600 mm	**AM_7B5_0XXXE**	a single drawer	40 pcs.

Part number composition (example):

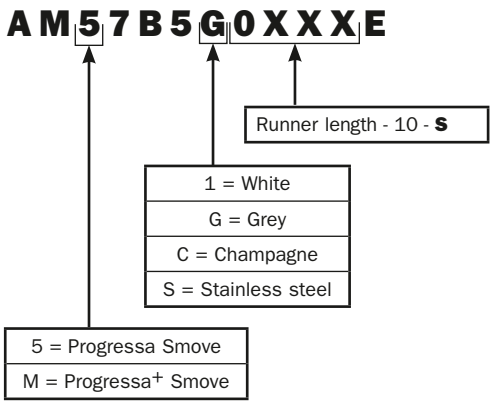

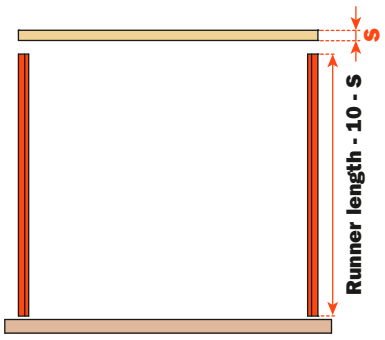

Minimum order quantity: 10 boxes for each dimension

Packing - 2-Sided - Inset Back - Kit (single packing)

Contains everything necessary to assemble 1 drawer

- 2 side profiles with premounted frontal and back connecting fittings
- frontal and back fixings, screws
- 1 pair of **Progressa Smove** runners for lengths from 250 to 550 mm
- 1 pair of **Progressa+ Smove** runners for lengths from 350 to 750 mm
- 1 pair of fixing clips

SIDE PROFILE H 101 mm 2-SIDED DRAWER Inset Back	**PART NUMBER**	**BOX**	**PALLET**
Profile length up to 600 mm	**AM_7M6_0XXXE**	a single drawer	40 pcs.

SIDE PROFILE H 178 mm 2-SIDED DRAWER Inset Back	**PART NUMBER**	**BOX**	**PALLET**
Profile length up to 600 mm	**AM_7A6_0XXXE**	a single drawer	40 pcs.

SIDE PROFILE H 237 mm 2-SIDED DRAWER Inset Back	**PART NUMBER**	**BOX**	**PALLET**
Profile length up to 600 mm	**AM_7H6_0XXXE**	a single drawer	40 pcs.

SIDE PROFILE H 75 mm 2-SIDED DRAWER Inset Back	**PART NUMBER**	**BOX**	**PALLET**
Profile length up to 600 mm	**AM_7B6_0XXXE**	a single drawer	40 pcs.

Part number composition (example):

A M 5 7 B 6 G 0 X X X E

- 5 = Progressa Smove
- M = Progressa+ Smove
- 1 = White
- G = Grey
- C = Champagne
- S = Stainless steel
- Runner length - 10

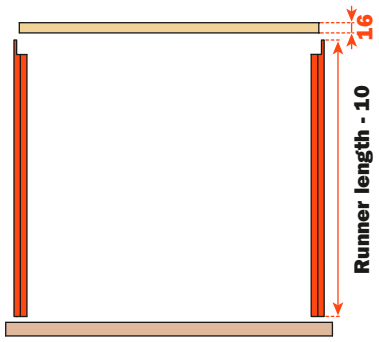

Minimum order quantity: 10 boxes for each dimension

Packing - Box of 5 PROFILES

Side and back profiles - 3 metre lengths

SIDE PROFILE	PART NUMBER	BOX	PALLET
Side profile H 101 mm	**AMRMXX_3000**	5 pcs.	80 pcs.
Side profile H 178 mm	**AMRAXX_3000**	5 pcs.	60 pcs.
Side profile H 237 mm	**AMRHXX_3000**	5 pcs.	40 pcs.
Side profile H 75 mm	**AMRBXX_3000**	5 pcs.	80 pcs.

BACK PROFILE	PART NUMBER	BOX	PALLET
Back profile H 101 mm	**AMPMXX_3000**	5 pcs.	80 pcs.
Back profile H 178 mm	**AMPAXX_3000**	5 pcs.	60 pcs.
Back profile H 75 mm	**AMPBXX_3000**	5 pcs.	80 pcs.

Part number composition (example):

A M P B X X G 3 0 0 0

1 = White
G = Grey
C = Champagne
S = Stainless steel

Packing - Industrial packing

COMPONENTS	PART NUMBER	BOX	PALLET
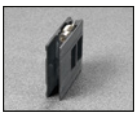 Frontal and back connecting fitting	**AMGPXA3**	200 pcs.	8000 pcs.
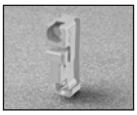 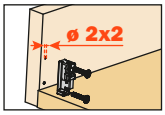 Screw-on frontal and back fixing, screws for wooden frontal included ø 3.5 x 20 mm	**SMGR12AGXA**	200 pcs.	8000 pcs.
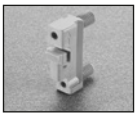 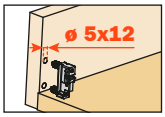 Knock-in frontal and back fixing	**SMGR12AGCA**	200 pcs.	8000 pcs.
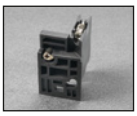 Left back connecting fitting	**AMGPSP3**	100 pcs.	4000 pcs.
Right back connecting fitting	**AMGPDP3**	100 pcs.	4000 pcs.
Medium corner connector	**SMGP89P3MA**	200 pcs.	8000 pcs.
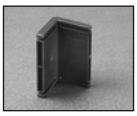 High corner connector	**SMGP89P3AA**	200 pcs.	4000 pcs.
Cover cap with embossed logo, it can be personalised on request.	**SCCX83H9** (Nickel-plated)	5000 pcs.	30000 pcs.
	SCCX83H6 (Titanium)	5000 pcs.	30000 pcs.
Cover cap with silk-screen printed logo, it can be personalised on request.	**SCXX83H9** (Nickel-plated)	5000 pcs.	30000 pcs.
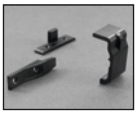 Reinforcing supports for the bottom of the drawer	**AMSRX33**	50 pcs. per type	3600 pcs.

Packing - Front panel for internal drawer

H 75 mm

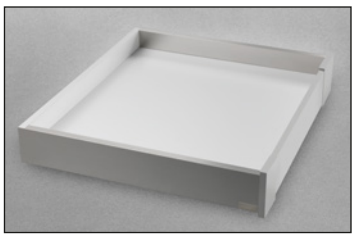

PART NUMBER	FINISH	BOX
AMABPE1F	White	3 pairs
AMABPEGF	Grey	3 pairs
AMABPECF	Champagne	3 pairs
AMABPESF	Stainless steel	3 pairs

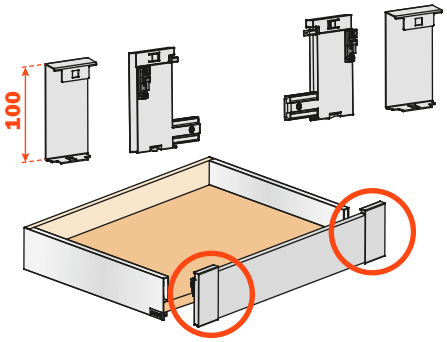

PART NUMBER	FINISH	BOX
AMFLP411062F	White	6 pcs.
AMFLP4G1062F	Grey	6 pcs.
AMFLP4C1062F	Champagne	6 pcs.
AMFLP4S1062F	Stainless steel	6 pcs.

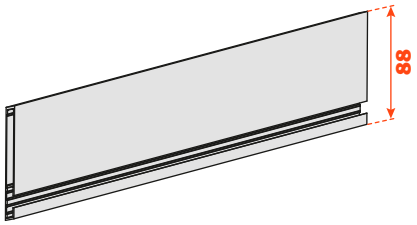

H 101 mm

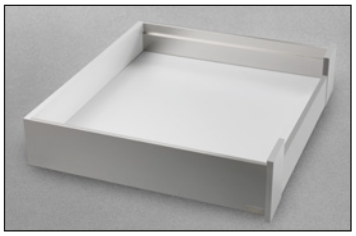

PART NUMBER	FINISH	BOX
AMAMPE1F	White	3 pairs
AMAMPEGF	Grey	3 pairs
AMAMPECF	Champagne	3 pairs
AMAMPESF	Stainless steel	3 pairs

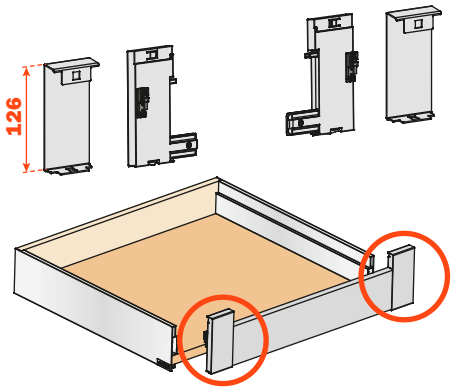

PART NUMBER	FINISH	BOX
AMFLP411062F	White	6 pcs.
AMFLP4G1062F	Grey	6 pcs.
AMFLP4C1062F	Champagne	6 pcs.
AMFLP4S1062F	Stainless steel	6 pcs.

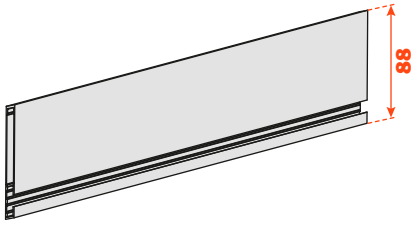

H 178 mm

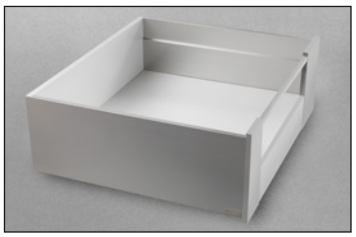

PART NUMBER	FINISH	BOX
AMAAPE1F	White	3 pairs
AMAAPEGF	Grey	3 pairs
AMAAPECF	Champagne	3 pairs
AMAAPESF	Stainless steel	3 pairs

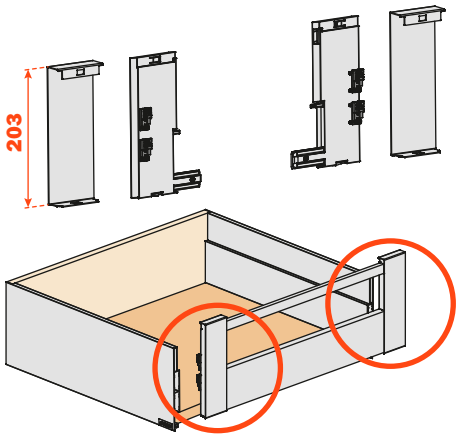

PART NUMBER	FINISH	BOX
AMFLP411062F	White	6 pcs.
AMFLP4G1062F	Grey	6 pcs.
AMFLP4C1062F	Champagne	6 pcs.
AMFLP4S1062F	Stainless steel	6 pcs.

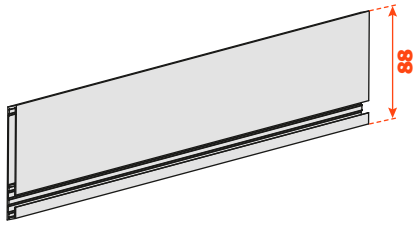

PART NUMBER	FINISH	BOX
AMBFP411062F	White	6 pcs.
AMBFP4G1062F	Grey	6 pcs.
AMBFP4C1062F	Champagne	6 pcs.
AMBFP4S1062F	Stainless steel	6 pcs.

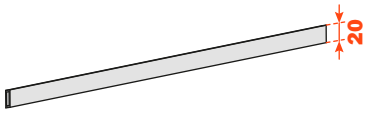

Packing - Front panel for internal drawer with 8 mm thick insert

H 101 mm

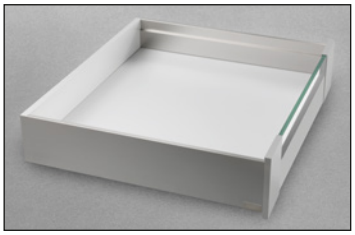

PART NUMBER	FINISH	BOX
AMAMVE1F	White	3 pairs
AMAMVEGF	Grey	3 pairs
AMAMVECF	Champagne	3 pairs
AMAMVESF	Stainless steel	3 pairs

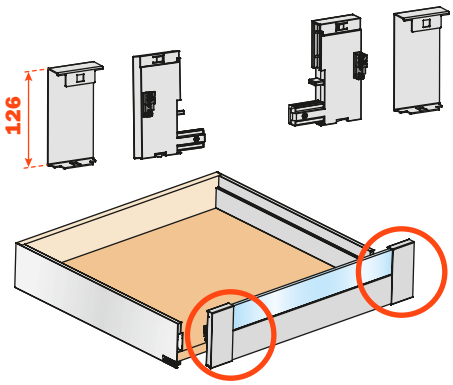

PART NUMBER	FINISH	BOX
AMFLV411062F	White	6 pcs.
AMFLV4G1062F	Grey	6 pcs.
AMFLV4C1062F	Champagne	6 pcs.
AMFLV4S1062F	Stainless steel	6 pcs.

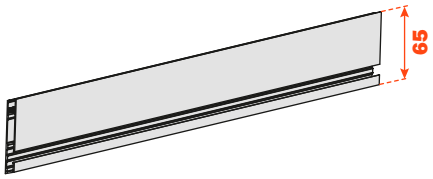

Gasket included.

Inserts not included.

H 178 mm

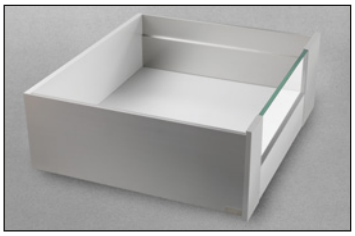

PART NUMBER	FINISH	BOX
AMAAVE1F	White	3 pairs
AMAAVEGF	Grey	3 pairs
AMAAVECF	Champagne	3 pairs
AMAAVESF	Stainless steel	3 pairs

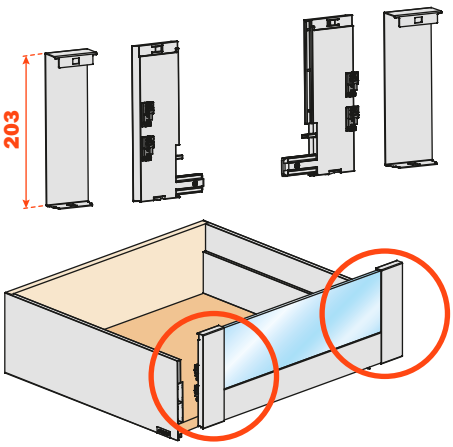

PART NUMBER	FINISH	BOX
AMFLV411062F	White	6 pcs.
AMFLV4G1062F	Grey	6 pcs.
AMFLV4C1062F	Champagne	6 pcs.
AMFLV4S1062F	Stainless steel	6 pcs.

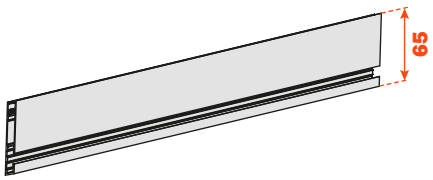

Gasket included.

Inserts not included.

Finishes

White

Grey

Champagne

Stainless steel

SALICE

HEADQUARTERS AND PRODUCTION UNITS

ARTURO SALICE S.p.A.

HEAD OFFICE

VIA PROVINCIALE NOVEDRATESE, 10
22060 NOVEDRATE (COMO) ITALIA
TEL. 031 790424 - FAX 031 791508
info.salice@salice.com
www.salice.com

ARTURO SALICE S.p.A.

VIA ARISTIDE MERLONI, 11
61036 COLLI AL METAURO (PU) ITALIA
TEL. 0721 899800
FAX 0721 897980
info.salice@salice.com
www.salice.com

BORTOLUZZI SISTEMI S.p.A.

VIA CADUTI 14 SETTEMBRE 1944, 45
32100 BELLUNO (BL) ITALIA
TEL. 0437 930866
FAX 0437 931442
info@bortoluzzi.com
www.salice.com

NUOVA ATIM S.r.l.

VIA IV NOVEMBRE, 52
20019 SETTIMO MILANESE (MI) ITALIA
TEL. 02 33503203
FAX 02 33516514
info@atimspa.com
www.atimspa.com

BRANCHES

DEUTSCHE SALICE GMBH

RUDOLF DIESEL STR. 10
74382 NECKARWESTHEIM
TEL. 07133 9807-0
FAX. 07133 9807-16
info.salice@deutschesalice.de
www.salice.com

DEUTSCHE SALICE GMBH

VERKAUFSBÜRO NORD
RINGSTRASSE 36/A30 CENTER
32584 LÖHNE
TEL. 05731 15608-0
FAX. 05731 15608-10
vknord@deutschesalice.de
www.salice.com

SALICE UK LTD.

KINGFISHER WAY
HINCHINGBROOKE BUSINESS PARK
HUNTINGDON CAMBS PE 29 6FN
TEL. 01480 413831
FAX. 01480 451489
info.salice@saliceuk.co.uk
www.salice.com

SALICE FRANCE S.A.R.L.

285 RUE DE GOA ZAC LES 3 MOULINS
06600 ANTIBES
TEL. 0493 330069
FAX. 0493 330141
info.salice@salicefrance.com
www.salice.com

SALICE ESPAÑA, S.L.U.

C/ AIGUAFREDA 4, P.I. AMETLLA PARK
08480 L'AMETLLA DEL VALLÈS (BARCELONA)
TEL. 0034 938 46 88 61
info.salice@saliceespana.es
www.salice.com

SALICE PORTUGAL UNIP. LDA

SHOWROOM:
TV SÁ E MELO 161 FA
4470-116 MAIA – PORTO
TEL: 00351 224 154 221
Info@saliceportugal.pt
www.salice.com
ARMAZÉM:
VIA ROTA DOS MÓVEIS I 399
4585-325 GANDRA

SALICE CHINA (SHANGHAI) CO. LTD.

RM 602, 6/F, TOWER 1,
3688 YINGGANG DONG ROAD
QINGPU DISTRICT
201703 SHANGHAI, CHINA
TEL. 021 3988-9880
info.salice@salicechina.com
www.salicechina.com

SALICE INDIA PVT. LTD.

1001 & 1002, 10TH FLOOR,
CENTRUM, PLOT NO. C-3,
OPP. WAGLE PRABHAG SAMITI OFFICE,
MIDC AREA, WAGLE INDUSTRIAL ESTATE,
THANE - 400604, MAHARASHTRA
TEL. 022 20812050
info@saliceindia.com
www.salice.com

SALICE CANADA INC.

3500 RIDGEWAY DRIVE,
UNIT#1
MISSISSAUGA, ONTARIO, L5L 0B4
TEL. 905 820 8787
FAX. 905 820 7226
info.salice@salicecanada.com
www.salicecanada.com

SALICE AMERICA INC.

2123 CROWN CENTRE DRIVE
CHARLOTTE NC. 28227
TEL. 704 841 7810
FAX. 704 841 7808
info.salice@saliceamerica.com
www.saliceamerica.com

We reserve the right to change technical specifications.

ARTURO SALICE S.p.A.

HEAD OFFICE

VIA PROVINCIALE NOVEDRATESE, 10
22060 NOVEDRATE (COMO) ITALIA
TEL. 031 790424 - FAX 031 791508

info.salice@salice.com
www.salice.com

Digital contents

D0CASG016ENG Ed. 04 - 05/2025