Charts to determine which Smove is to be used for a particular door size and weight.
We recommend that all applications are verified by a practical trial.

DRBWXXYXI





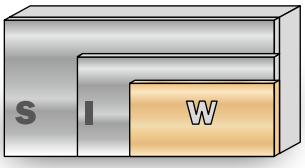

With particularly light doors, it may be sufficient to use only one Smove

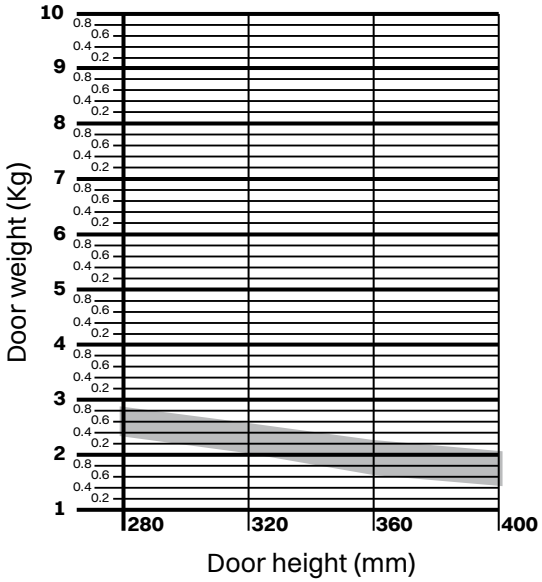

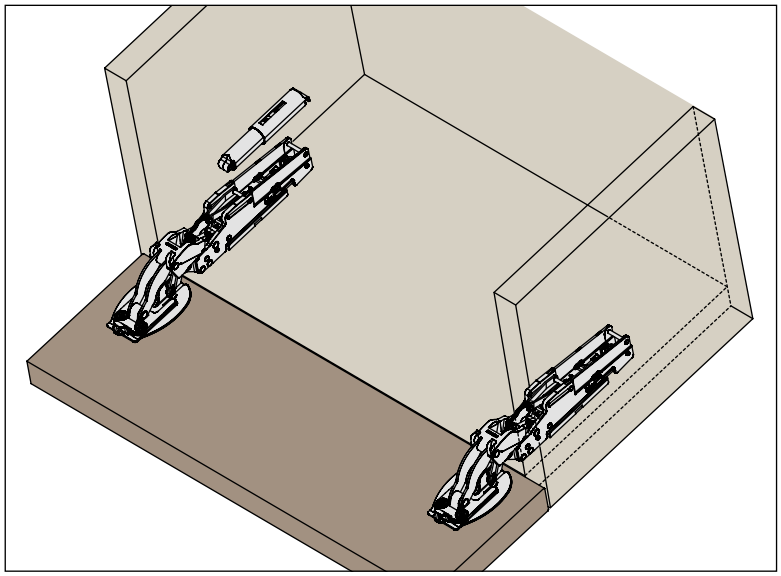

DRBWXXYXI





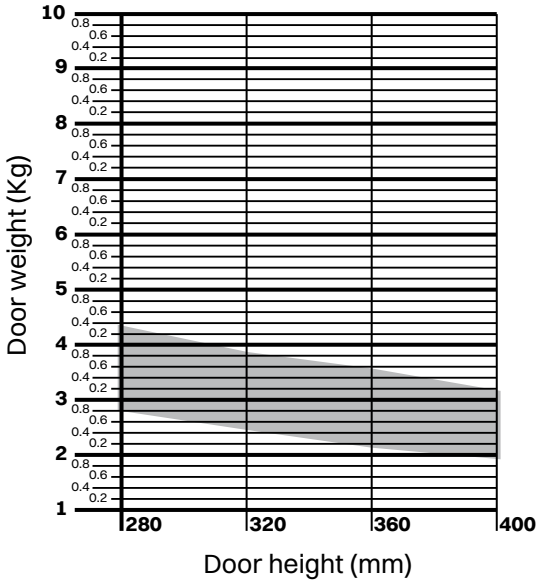

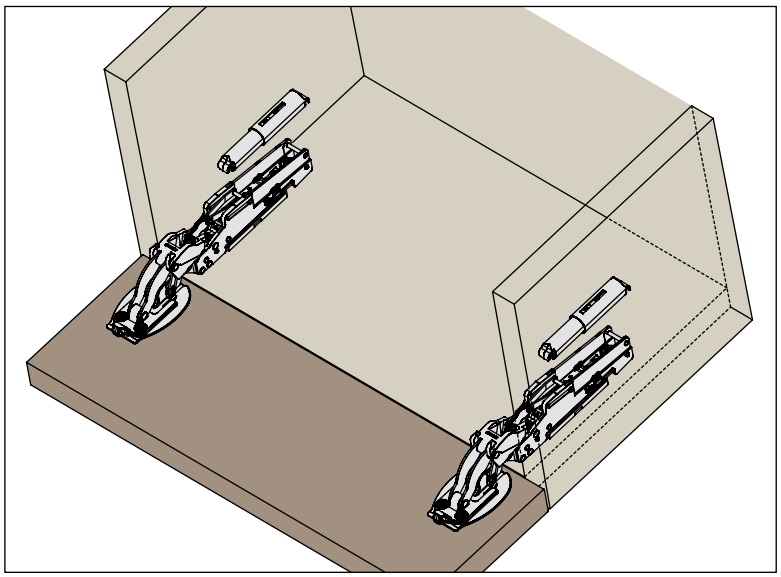

DRBIXXYXI





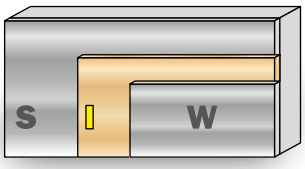

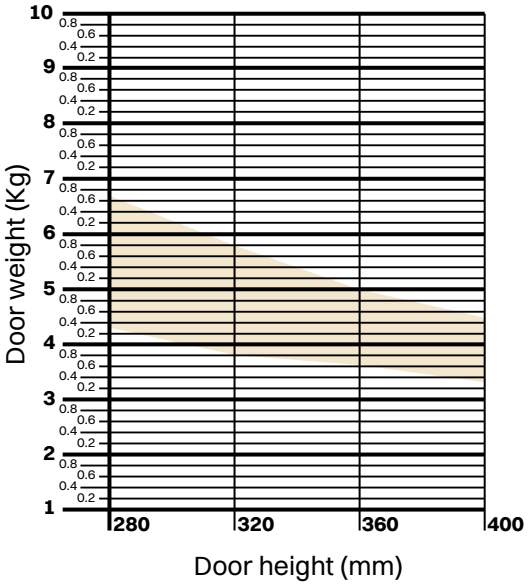

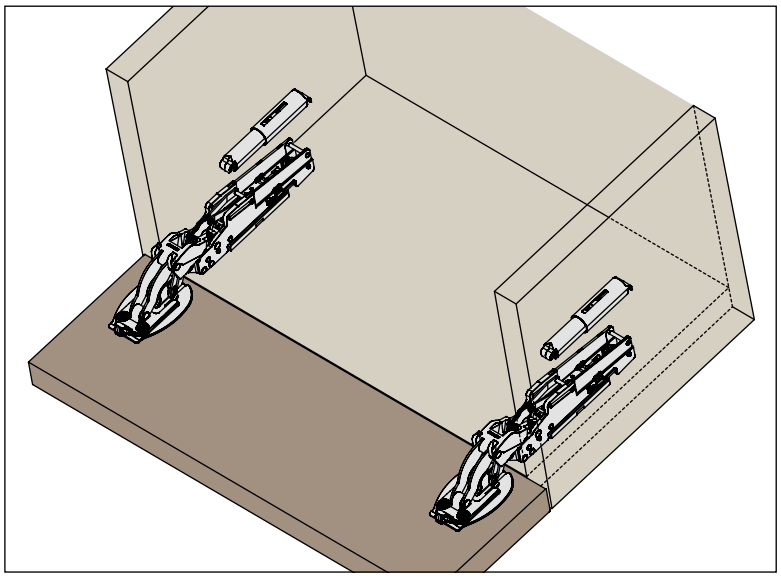

DRBSXXYXI





