
excessories
NIGHT COLLECTION
SALICE
ENG



WARDROBE ACCESSORIES

Store, Hang, Protect, Contain, Pull-out.
The Salice Excessories Collection provides elegant and highly desirable enhancements to everything that wardrobes are used for, with an almost infinite variety of beautiful products that can be customised to suit your own individual taste and needs.
Exquisitely designed gloveboxes, coat hangers, trays and much more, breathe new life into bedroom design by transforming simple storage - ingeniously optimising space with stunning interior design possibilities.
The drawers and the illuminated shelves, symbolic of a refined, elegant and rigorous minimalism, are the perfect combination of technological development and aesthetics, enabling what is stored inside the wardrobe to stand out.
A tasteful palette of colours and a range of surface textures ensures both the freedom to personalise the selection of accessories and their perfect compatibility with wardrobes of any design and material.

SALICE


excessories
store





Beautifully-proportioned glovebox trays which can accommodate a selection of storage elements for items that require special care and attention.



In particular, the collection includes watch-holder trays, spectacle holders, ring holders, earring holders, made of imitation or genuine leather, available in various colours and dimensions, according to individual aesthetic and functional requirements.

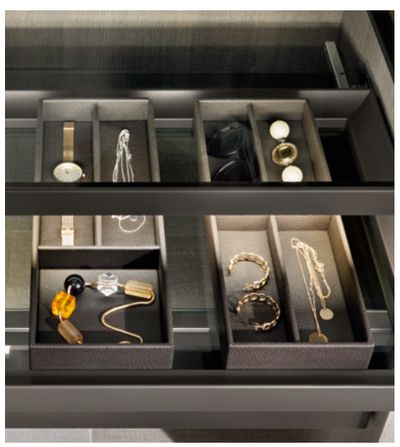









Like the gloveboxes, the drawer bottoms with three dividers, made of imitation leather, can be also used to store ties, scarves or belts.







Purpose-made holders for wristwatches, rings and earrings fit perfectly within elegant 3 mm-thick drawer inserts, available in wenge or walnut finishes.

The inserts can also be placed on drawer bottoms, made of imitation leather, thus creating a precious and highly aesthetic drawer, able to embellish all the stored items.

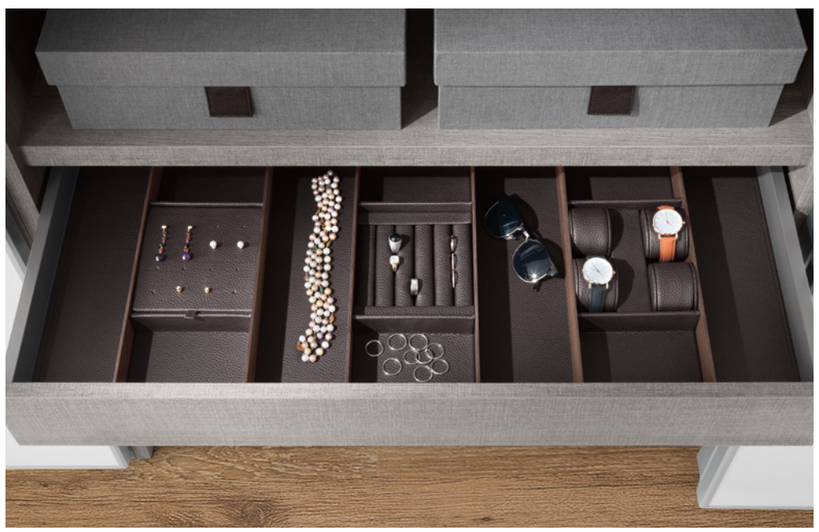




eXcessories
hang











Details always make the difference.
The collection also boasts an extractable or rotating coat hanging hook which, when fixed to the shelf, offers an additional handy support when needed.



A multiplicity of options to hang clothes and accessories neatly and to keep them looking their best.
Hangers, cloth and bag hangers, scarf, tie and belt holders made of wenge-dyed beech wood can be now fully personalised with precious inserts or leather supports with many possible combinations.

In the same way, even the most functional items, such as hanger rods can be equipped with a leather sleeve.












eXcessories
protect



Accessories which protect clothes and keep them with elegance inside the wardrobe. The fabric holder bags, height adjustable and provided with pleats to easily contain bulky items of clothing, are made of 100% cotton and available in various colours.



The elegant coat-holder bags can be folded with buttons made of wenge-dyed olive wood.








eXcessories
contain







Boxes and trays for clothing or other items, covered with elegant fabric, enable the internal space to be organised and enriched with tones and colours.







Several dimensions and multiple finishes to select, both boxes and trays can be embellished with a tab and/or a front label made of imitation leather.



eXcessories

pull-out

The drawers too, available in different versions and heights, play a central role in the Excessories collection.

4-sides aluminium drawers, characterized by elegant shapes and a futuristic style, come with bottoms made of wood, glass or imitation leather.

A classic synthesis of technological development and design, they stand out for the elegance of the profiles, oozing perfect aesthetics and smooth and sinuous shapes, also enabling, from a functional point of view, the easy cleaning of the drawer bottom.















3-sided aluminium drawers with wooden frontal are also available.

Thanks to an easy and quick assembly and a clean and refined aesthetics, the drawers are perfectly compatible with wardrobes of any design and material.
No technical element is visible.











The drawers with glass frontals make the wardrobe even more elegant and desirable.





The drawers are unique and highly distinctive thanks to their faultless design, the attention to details and their sophisticated working, especially between the side and the frontal.



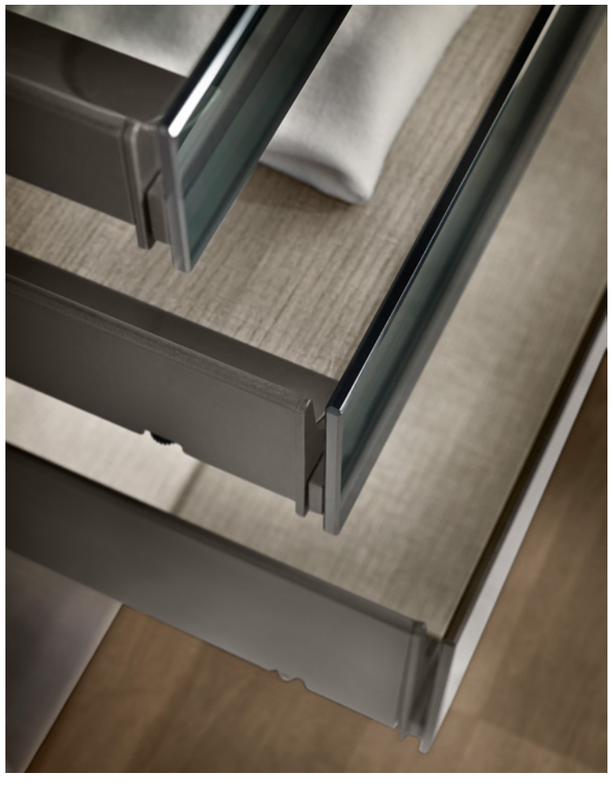



Different accessories for drawers are also included in the collection: trousers hangers, wired or metal shoe racks and bed linen storage compartments made of quilted fabric.













The Excessories collection is the answer to any possible applications, always offering the best solution.
The side spacers, for example, used in case of wardrobes with double or sliding doors, allow the perfect pulling out of the drawer, without hitting the doors of the wardrobe.







excessories

shelves

Nowadays the light plays a vital role in walk-in wardrobes.
The illuminated shelves of the collection bring clothes and accessories to life; the wardrobe lights up and animates all the stored items.

The lighting system is perfectly hidden and the shelf bottoms, made of glass, amplify even more the brightness and the luminance.

The hanger rail, and the special refined working of its supports, complete and embellish the product design.

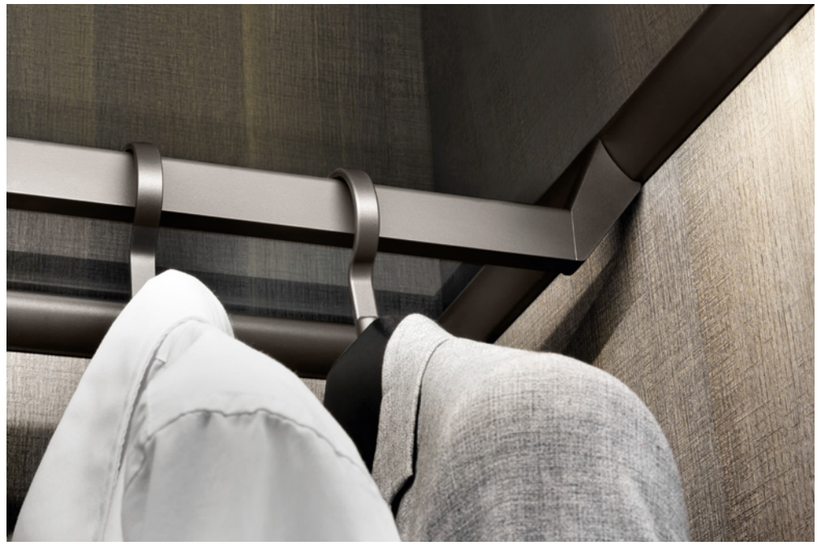









Excessories - store

VE80CXLA12__B = depth 360 mm
VE80CXLA11__B = depth 410 mm
Finish code number on page 46, chart 1

Multi-purpose tray with internal divider
- Material: imitation leather
- External dimensions (mm): 360x150 or 410x150 H 50
- Packing: 4 pieces per box





VE80CXLA14__B = depth 360 mm
VE80CXLA13__B = depth 410 mm
Finish code number on page 46, chart 1

Multi-purpose tray with 3 internal dividers
- Material: imitation leather
- External dimensions (mm): 360x150 or 410x150 H 50
- Packing: 4 pieces per box





VE80CXLA16__B = depth 360 mm
VE80CXLA15__B = depth 410 mm
Finish code number on page 46, chart 1

Multi-purpose tray with 4 internal dividers
- Material: imitation leather
- External dimensions (mm): 360x150 or 410x150 H 50
- Packing: 4 pieces per box





VE80CXLA02__B = depth 360 mm
VE80CXLA01__B = depth 410 mm
Finish code number on page 46, chart 1

Multi-purpose tray with 5 internal dividers
- Material: imitation leather
- External dimensions (mm): 360x150 or 410x150 H 50
- Packing: 4 pieces per box





Excessories - store

VE80CXLA08__B = depth 360 mm
VE80CXLA07__B = depth 410 mm
Finish code number on page 46, chart 1

Ring-holder tray
- Material: imitation leather
- External dimensions (mm): 360x150 or 410x150 H 50
- Packing: 4 pieces per box





VE80CXLA06__B = depth 360 mm
VE80CXLA05__B = depth 410 mm
Finish code number on page 46, chart 1

Earring-holder tray
- Material: imitation leather
- External dimensions (mm): 360x150 or 410x150 H 50
- Packing: 4 pieces per box





VE80CXLA10__B = depth 360 mm
VE80CXLA09__B = depth 410 mm
Finish code number on page 46, chart 1

Earring- and ring-holder tray
- Material: imitation leather
- External dimensions (mm): 360x150 or 410x150 H 50
- Packing: 4 pieces per box





VE80CXLA04__B = depth 360 mm
VE80CXLA03__B = depth 410 mm
Finish code number on page 46, chart 1

Watch-holder tray
- Material: imitation leather
- External dimensions (mm): 360x150 or 410x150 H 50
- Packing: 4 pieces per box





Excessories - store

VE80CXMA01__B
Finish code number on page 47

Multi-purpose tray with removable internal divider
- Material: genuine leather
- External dimensions (mm): 285x128 H 55
- Packing: 4 pieces per box





VE80CXMA03__B
Finish code number on page 47

Ring-holder tray
- Material: genuine leather
- External dimensions (mm): 285x128 H 55
- Packing: 4 pieces per box





VE80CXMA04__B
Finish code number on page 47

Earring- and ring-holder tray
- Material: genuine leather
- External dimensions (mm): 285x128 H 55
- Packing: 4 pieces per box





VE80CXMA02__B
Finish code number on page 47

Watch-holder tray
- Material: genuine leather
- External dimensions (mm): 285x128 H 55
- Packing: 4 pieces per box





Excessories - store

VE80CXNA01__B = depth 360 mm
VE80CXNA02__B = depth 410 mm
Finish code number on page 46, chart 2

HPL drawer insert, wenge-dyed finish, with bottom
- Material: imitation leather
- External dimensions (mm): 360x150 or 410x150 H 50
- Packing: 4 pieces per box





VE80CXNA09__B = depth 360 mm
VE80CXNA10__B = depth 410 mm
Finish code number on page 46, chart 2

HPL drawer insert, wenge-dyed finish, with 3 storage dividers
- Material: imitation leather
- External dimensions (mm): 360x150 or 410x150 H 50
- Packing: 4 pieces per box





VE80CXNA07__B = depth 360 mm
VE80CXNA08__B = depth 410 mm
Finish code number on page 46, chart 2

HPL drawer insert, wenge-dyed finish, with ring holder
- Material: imitation leather
- External dimensions (mm): 360x150 or 410x150 H 50
- Packing: 4 pieces per box





VE80CXNA05__B = depth 360 mm
VE80CXNA06__B = depth 410 mm
Finish code number on page 46, chart 2

HPL drawer insert, wenge-dyed finish, with earring holder
- Material: imitation leather
- External dimensions (mm): 360x150 or 410x150 H 50
- Packing: 4 pieces per box





Excessories - store

VE80CXNA03__B = depth 360 mm
VE80CXNA04__B = depth 410 mm
Finish code number on page 46, chart 2

HPL drawer insert, wenge-dyed finish, with watch holder
- Material: imitation leather
- External dimensions (mm): 360x150 or 410x150 H 50
- Packing: 4 pieces per box





VE80CXNA01__B = depth 360 mm
VE80CXNA02__B = depth 410 mm
Finish code number on page 46, chart 3

HPL drawer insert, walnut-dyed finish, with bottom
- Material: imitation leather
- External dimensions (mm): 360x150 or 410x150 H 50
- Packing: 4 pieces per box





VE80CXNA09__B = depth 360 mm
VE80CXNA10__B = depth 410 mm
Finish code number on page 46, chart 3

HPL drawer insert, walnut-dyed finish, with 3 storage dividers
- Material: imitation leather
- External dimensions (mm): 360x150 or 410x150 H 50
- Packing: 4 pieces per box





VE80CXNA07__B = depth 360 mm
VE80CXNA08__B = depth 410 mm
Finish code number on page 46, chart 3

HPL drawer insert, walnut-dyed finish, with ring holder
- Material: imitation leather
- External dimensions (mm): 360x150 or 410x150 H 50
- Packing: 4 pieces per box





Excessories - store

VE80CXNA05__B = depth 360 mm
VE80CXNA06__B = depth 410 mm
Finish code number on page 46, chart 3

HPL drawer insert, walnut-dyed finish, with earring holder
- Material: imitation leather
- External dimensions (mm): 360x150 or 410x150 H 50
- Packing: 4 pieces per box





VE80CXNA03__B = depth 360 mm
VE80CXNA04__B = depth 410 mm
Finish code number on page 46, chart 3

HPL drawer insert, walnut-dyed finish, with watch holder
- Material: imitation leather
- External dimensions (mm): 360x150 or 410x150 H 50
- Packing: 4 pieces per box





VE80CXG_____B
Finish code number on page 46, chart 1

Bottom for drawers, shelves and metal shoe racks
- Material: imitation leather
- Made to measure
  When ordering, please confirm the requested dimensions
- Packing: 10 pieces per box







VE80CXH_____B
Finish code number on page 46, chart 1

Drawer bottom with 3 dividers
- Material: imitation leather
- Made to measure
  When ordering, please confirm the requested dimensions
- Packing: 10 pieces per box





The drawer bottom can be personalised and integrated with leather multi-purpose trays or watch-, ring- and earring-holder trays.
The possible combinations are endless.



FINISHES

Excessories - store - Imitation leather

MOKA BROWN



ELEPHANT GREY



OLIVE GREY

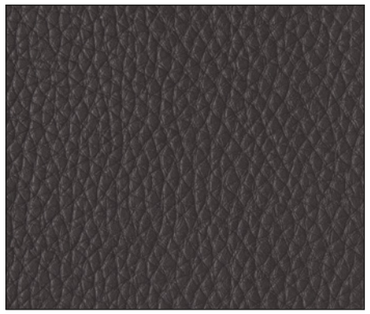

TAUPE BROWN



TOBACCO BROWN



TOFFEE WHITE



Code composition (example):

V E 8 0 C X L _ _ _ _ _ B

PRODUCT PART NUMBER

V E 8 0 C X G _ _ _ _ _ B

BOTTOM PART NUMBER, ACCORDING TO THE DIMENSIONS SUPPLIED

V E 8 0 C X H _ _ _ _ _ B

BOTTOM PART NUMBER, ACCORDING TO THE DIMENSIONS SUPPLIED

V E 8 0 C X N _ _ _ _ _ B

PRODUCT PART NUMBER

CHART 1
16 = MOKA BROWN IMITATION LEATHER
17 = ELEPHANT GREY IMITATION LEATHER
18 = OLIVE GREY IMITATION LEATHER
19 = TAUPE BROWN IMITATION LEATHER
20 = TOBACCO BROWN IMITATION LEATHER
21 = TOFFEE WHITE IMITATION LEATHER

CHART 2
F1 = HPL WENGE-DYED DRAWER INSERT - MOKA BROWN IMITATION LEATHER
F2 = HPL WENGE-DYED DRAWER INSERT - ELEPHANT GREY IMITATION LEATHER
F3 = HPL WENGE-DYED DRAWER INSERT - OLIVE GREY IMITATION LEATHER
F4 = HPL WENGE-DYED DRAWER INSERT - TAUPE BROWN IMITATION LEATHER
F5 = HPL WENGE-DYED DRAWER INSERT - TOBACCO BROWN IMITATION LEATHER
F6 = HPL WENGE-DYED DRAWER INSERT - TOFFEE WHITE IMITATION LEATHER

CHART 3
G1 = HPL WALNUT-DYED DRAWER INSERT - MOKA BROWN IMITATION LEATHER
G2 = HPL WALNUT-DYED DRAWER INSERT - ELEPHANT GREY IMITATION LEATHER
G3 = HPL WALNUT-DYED DRAWER INSERT - OLIVE GREY IMITATION LEATHER
G4 = HPL WALNUT-DYED DRAWER INSERT - TAUPE BROWN IMITATION LEATHER
G5 = HPL WALNUT-DYED DRAWER INSERT - TOBACCO BROWN IMITATION LEATHER
G6 = HPL WALNUT-DYED DRAWER INSERT - TOFFEE WHITE IMITATION LEATHER

FINISHES

Excessories - store - Genuine leather

MOKA BROWN



ELEPHANT GREY



FLAX GREY



TURTLE-DOVE GREY



MINK BROWN



RACING GREEN



KHAKI BROWN



Code composition (example):

V E 8 0 C X M A 0 1 _ _ B

01 = MOKA BROWN LEATHER
02 = ELEPHANT GREY LEATHER
03 = FLAX GREY LEATHER
04 = TURTLE-DOVE GREY LEATHER
05 = MINK BROWN LEATHER
06 = RACING GREEN LEATHER
07 = KHAKI BROWN LEATHER

Excessories - hang

VE80DBAA1670B

Women's suit hanger
- Hanger material: beech
- Hanger finish: wenge
- Hook material: die-cast, coated with epoxy-based powder
- Hook finish: metal grey brown
- External dimensions (mm): 400x293
- Packing: 4 pieces per box

Personalisation with hot-stamped or embossed logo on request.





VE80DBAA1970B

Men's suit hanger
- Hanger material: beech
- Hanger finish: wenge
- Hook material: die-cast, coated with epoxy-based powder
- Hook finish: metal grey brown
- External dimensions (mm): 450x257
- Packing: 4 pieces per box

Personalisation with hot-stamped or embossed logo on request.





VE80DBAA1070B

Skirt hanger
- Hanger material: beech
- Hanger finish: wenge
- Hook material: die-cast, coated with epoxy-based powder
- Hook finish: metal grey brown
- External dimensions (mm): 390x200
- Packing: 4 pieces per box

Personalisation with hot-stamped or embossed logo on request.





VE80DBAA1370B

Trousers hanger
- Hanger material: beech
- Hanger finish: wenge
- Hook material: die-cast, coated with epoxy-based powder
- Hook finish: metal grey brown
- External dimensions (mm): 390x170
- Packing: 4 pieces per box

Personalisation with hot-stamped or embossed logo on request.





Excessories - hang

VE80DBAA18__B
Finish code number on page 59

Women's suit hanger
- Hanger material: beech. Genuine leather insert
- Hanger finish: wenge
- Hook material: die-cast, coated with epoxy-based powder
- Hook finish: metal grey brown
- External dimensions (mm): 400x293
- Packing: 4 pieces per box

Personalisation with hot-stamped logo on request.



VE80DBAA21__B
Finish code number on page 59

Men's suit hanger
- Hanger material: beech. Genuine leather insert
- Hanger finish: wenge
- Hook material: die-cast, coated with epoxy-based powder
- Hook finish: metal grey brown
- External dimensions (mm): 450x257
- Packing: 4 pieces per box

Personalisation with hot-stamped logo on request.



VE80DBAA12__B
Finish code number on page 59

Skirt hanger
- Hanger material: beech. Genuine leather insert.
- Hanger finish: wenge
- Hook material: die-cast, coated with epoxy-based powder
- Hook finish: metal grey brown
- External dimensions (mm): 390x200
- Packing: 4 pieces per box

Personalisation with hot-stamped logo on request.



VE80DBAA15__B
Finish code number on page 59

Trousers hanger
- Hanger material: beech. Genuine leather insert.
- Hanger finish: wenge
- Hook material: die-cast, coated with epoxy-based powder
- Hook finish: metal grey brown
- External dimensions (mm): 390x170
- Packing: 4 pieces per box

Personalisation with hot-stamped logo on request.



Excessories - hang

VE80DBAA0570B

Bags hanger
- Bags hanger material: beech
- Bags hanger finish: wenge
- Hook material: die-cast, coated with epoxy-based powder
- Hook finish: metal grey brown
- External dimensions (mm): 98x185
- Packing: 10 pieces per box

Personalisation with hot-stamped or embossed logo on request.





VE80DBAA0770B

Scarves and headscarves hanger
- Hanger material: beech
- Hanger finish: wenge
- Hook material: die-cast, coated with epoxy-based powder
- Hook finish: metal grey brown
- External dimensions (mm): 150x245
- Packing: 10 pieces per box





VE80DBAA09__B
Finish code number on page 59

Tie and belt hanger. Genuine leather support.
- Material: beech
- Finish: wenge
- External dimensions (mm): 68x156
- Packing: 10 pieces per box

Personalisation with hot-stamped logo on request.







Excessories - hang

All the hangers of the collection can perfectly match scarves and headscarves, suits, belts and ties, already in the wardrobe.



VE80DBAA0170B

Hanger rod
- Material: beech
- Finish: wenge
- Dimensions (mm): 840
- Packing: 8 pieces per box

Screw the hanger rod into the threaded bush in the hanger.









Excessories - hang

VE80DBAA03__B
Finish code number on page 59

Hanger rod with genuine leather sleeve
- Material: beech
- Finish: wenge
- Dimensions (mm): 840
- Packing: 8 pieces per box

Screw the hanger rod into the threaded bush in the hanger.









VE80DBAA0270B

Hanger rod with hook
- Hanger rod material: beech
- Hanger rod finish: wenge
- Hook material: die-cast, coated with epoxy-based powder
- Hook finish: metal grey brown
- Dimensions (mm): 970
- Packing: 8 pieces per box



VE80DBAA23__B
Finish code number on page 59

VE80DBAA23__B
Finish code number on page 59

Hanger rod with hook and genuine leather sleeve
- Hanger rod material: beech
- Hanger rod finish: wenge
- Hook material: die-cast, coated with epoxy-based powder
- Hook finish: metal grey brown
- Dimensions (mm): 970
- Packing: 8 pieces per box





Excessories - hang

VE80DBAA04__B
Finish code number on page 59

Tie hanger rod with genuine leather supports
- Tie hanger rod material: beech
- Tie hanger rod finish: wenge
- Hook material: die-cast, coated with epoxy-based powder
- Hook finish: metal grey brown
- Dimensions (mm): 865
- Packing: 4 pieces per box





FINISHES

Excessories - hang - Genuine leather

MOKA BROWN



ELEPHANT GREY



FLAX GREY



TURTLE-DOVE GREY



MINK BROWN



RACING GREEN



KHAKI BROWN



Code composition (example):

V E 8 0 D B A A 1 8 _ _ B

A1 = MOKA BROWN LEATHER
A2 = ELEPHANT GREY LEATHER
A3 = FLAX GREY LEATHER
A4 = TURTLE-DOVE GREY LEATHER
A5 = MINK BROWN LEATHER
A6 = RACING GREEN LEATHER
A7 = KHAKI BROWN LEATHER

Excessories - hang

VE80DAHA0133B = Hanger rail for clothes, length 1000 mm
VE80DAHA0233B = Hanger rail for clothes, length 1500 mm
VE80GMRA00633B = End supports for hanger rail
VE80GMRA00733B = Centre support for hanger rail



Hanger rail for clothes with supports, for wooden shelf
To be fixed from the top of the cabinet

- Hanger rail material: aluminium, coated with epoxy-based powder, section 15x30 mm
- Supports material: die-cast, coated with epoxy-based powder
- Finish: metal grey brown
- Packing: 20 pieces per box, screws not included
  Use M6 screws
  Screw length = shelf thickness + min. 10 mm/max. 15 mm
- Custom-tailored hanger rail available when ordering more than 20 pieces

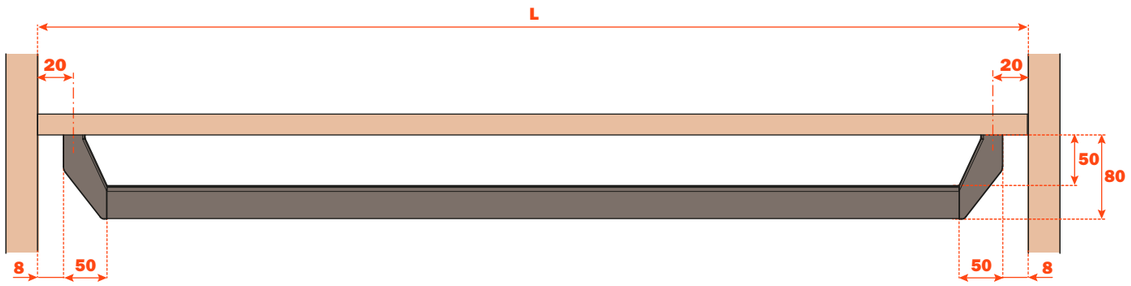

Centre support needed for hanger rails with length above 1200 mm or loads of more than 15 kg

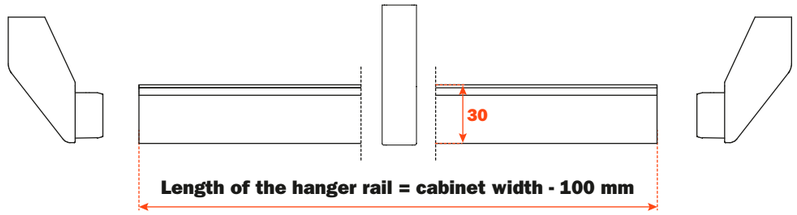

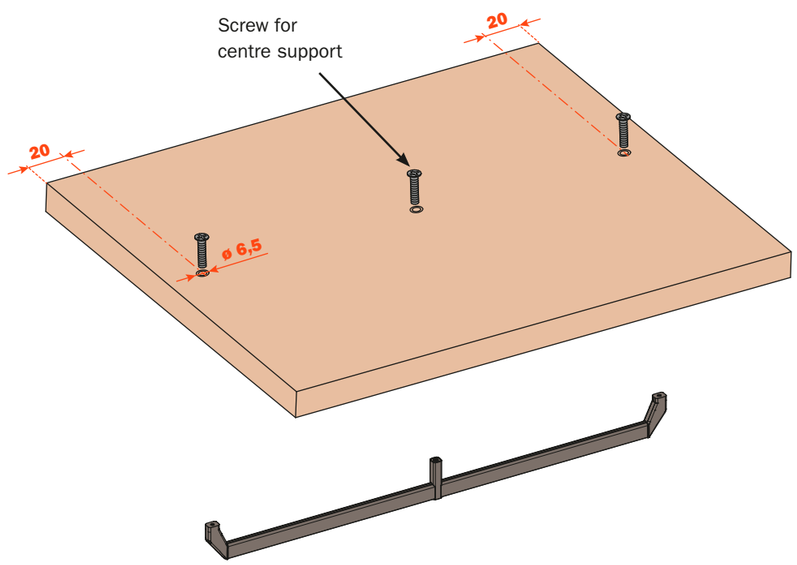

VE80DAHA0133B = Hanger rail for clothes, length 1000 mm
VE80DAHA0233B = Hanger rail for clothes, length 1500 mm
VE80DAHA1033B = End supports for hanger rail
VE80DAHA1133B = Centre support for hanger rail

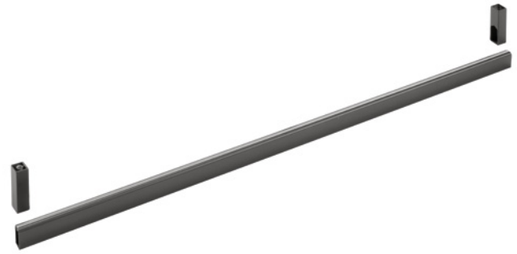

Hanger rail for clothes with supports, for wooden shelf
To be fixed from the top of the cabinet

- Hanger rail material: aluminium, coated with epoxy-based powder, section 15x30 mm
- Supports material: die-cast, coated with epoxy-based powder
- Finish: metal grey brown
- Packing: 20 pieces per box, screws not included
  Use M6 screws
  Screw length = shelf thickness + min. 10 mm/max. 15 mm
- Custom-tailored hanger rail available when ordering more than 20 pieces

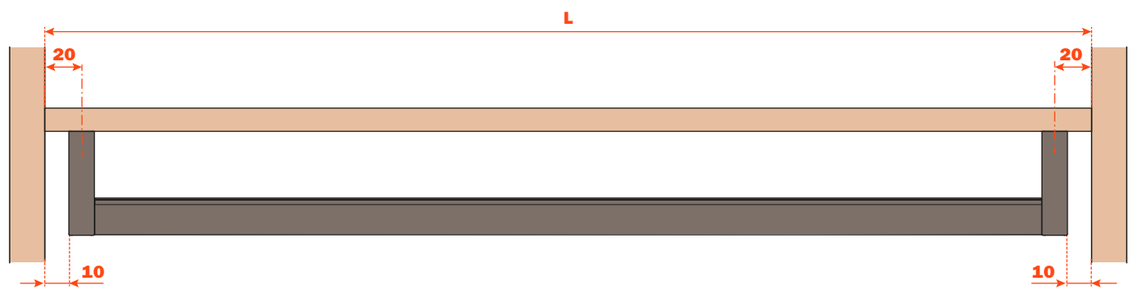

Centre support needed for hanger rails with length above 1200 mm or loads of more than 15 kg

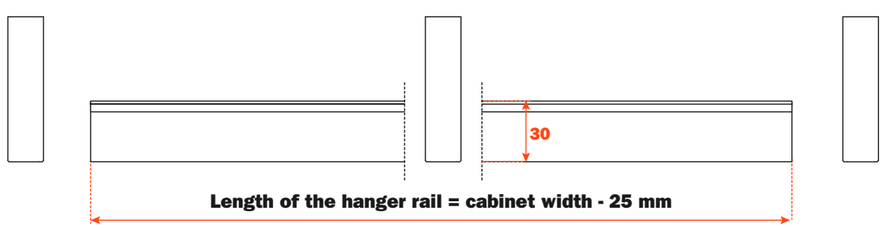

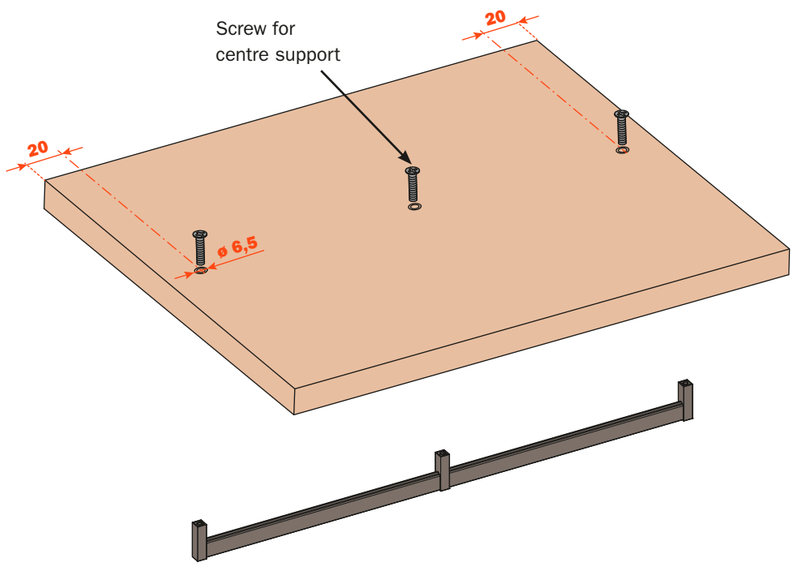

Excessories - hang

VE80DAVA0480B

Swivel hanger fixed under the shelf
- Material: steel
- Finish: nickel
- Packing: 20 pieces per box



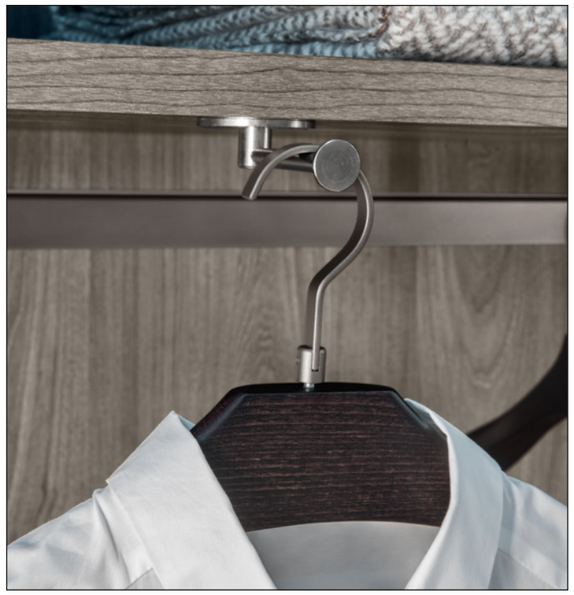

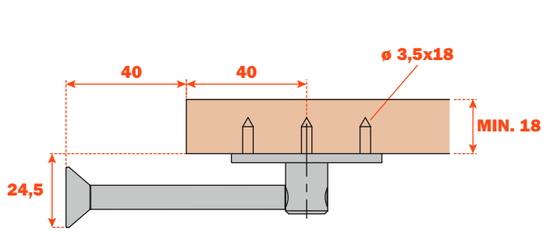

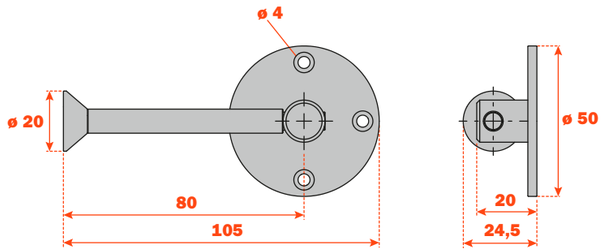





VE80DAVA0180B = Cap in nickel finish
VE80DAVA10C3B = Cap in metal grey brown finish

Pull-out hanger
- Material: steel
- Finish: nickel
- Packing: 20 pieces per box



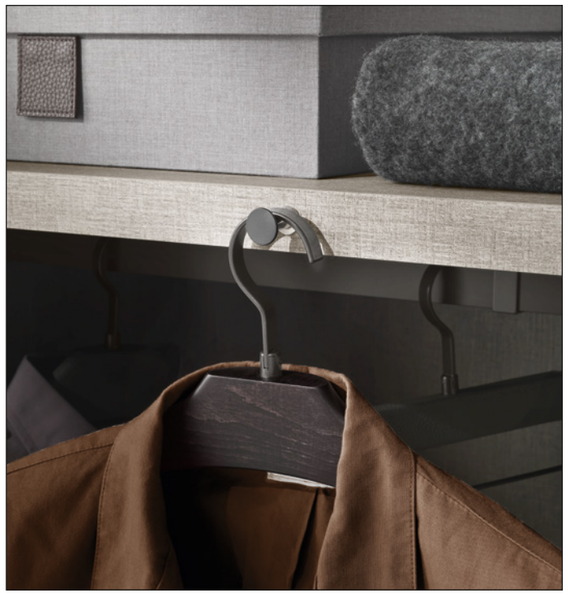

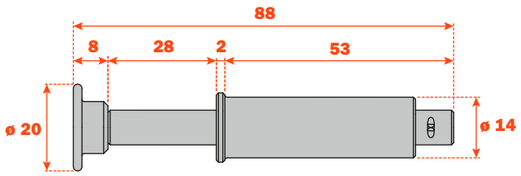

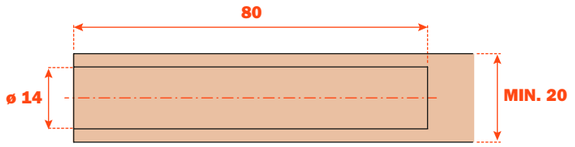





Excessories - protect

VE80DAQA01__B
Finish code number on page 65

Coat-holder bag with pleats. Buttons made of wenge-dyed olive wood
- To be used folded for jackets and loose for suits and coats
- Material: fabric 100% cotton
- External dimensions (mm): 970 folded, 1200 loose
- Packing: 4 pieces per box








FINISHES

Excessories - protect - Fabric 100% cotton

STONEWARE GREY



BRICK BROWN



MINT GREEN



Code Composition (example):

V E 8 0 D A Q A 0 1 _ _ B

90 = STONEWARE GREY
91 = BRICK BROWN
92 = MINT GREEN

Excessories - contain

VE80DFHA01__B
Finish code number on page 71, chart 1

Tray
- Material: fabric
- Dimensions (mm): 350x400 H 80
- Packing: 3 pieces per box

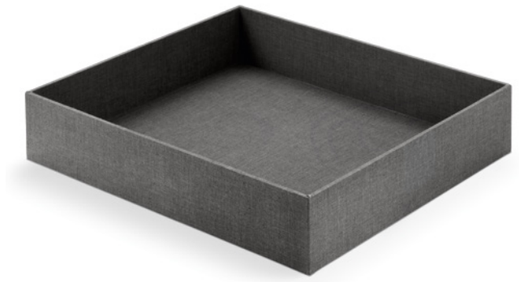



VE80DFLA01__B
Finish code number on page 71, chart 2

Tray with tab made of imitation leather
- Material: fabric
- Dimensions (mm): 350x400 H 80
- Packing: 3 pieces per box





VE80DFMA01__B
Finish code number on page 71, chart 2

Tray with tab and frontal made of imitation leather
- Material: fabric
- Dimensions (mm): 350x400 H 80
- Packing: 3 pieces per box





VE80DFHA02__B
Finish code number on page 71, chart 1

Tray
- Material: fabric
- Dimensions (mm): 350x400 H 120
- Packing: 3 pieces per box

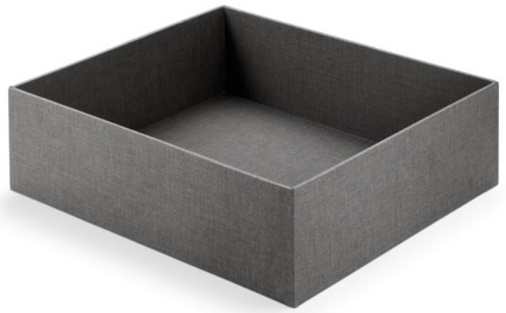



VE80DFLA02__B
Finish code number on page 71, chart 2

Tray with tab made of imitation leather
- Material: fabric
- Dimensions (mm): 350x400 H 120
- Packing: 3 pieces per box

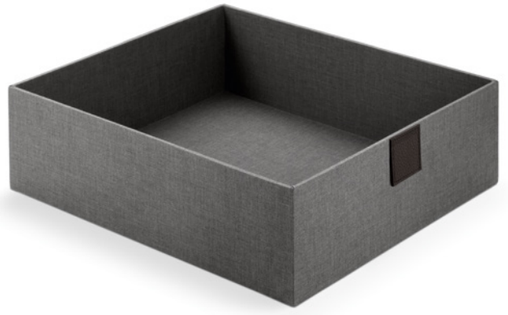



VE80DFMA02__B
Finish code number on page 71, chart 2

Tray with tab and frontal made of imitation leather
- Material: fabric
- Dimensions (mm): 350x400 H 120
- Packing: 3 pieces per box

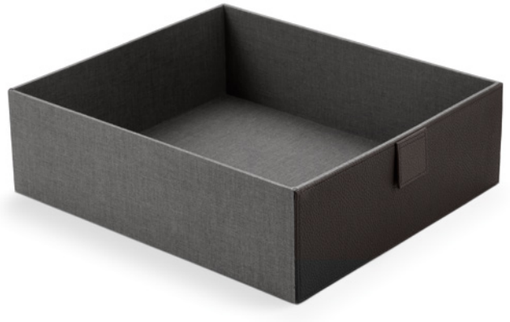



Excessories - contain

VE80DFCA01__B = Bottom Part number
VE80DFDA01__B = Top Part number
Finish code number on page 71, chart 1

Box
- Material: fabric
- Bottom dimensions (mm): 250x465 H 255
- Top dimensions (mm): 260x480 H 50
- Packing: 3 pieces per box



VE80DFFA01__B = Bottom Part number
Finish code number on page 71, chart 2
VE80DFDA01__B = Top Part number
Finish code number on page 71, chart 1

Box with tab made of imitation leather
- Material: fabric
- Bottom dimensions (mm): 250x465 H 255
- Top dimensions (mm): 260x480 H 50
- Packing: 3 pieces per box

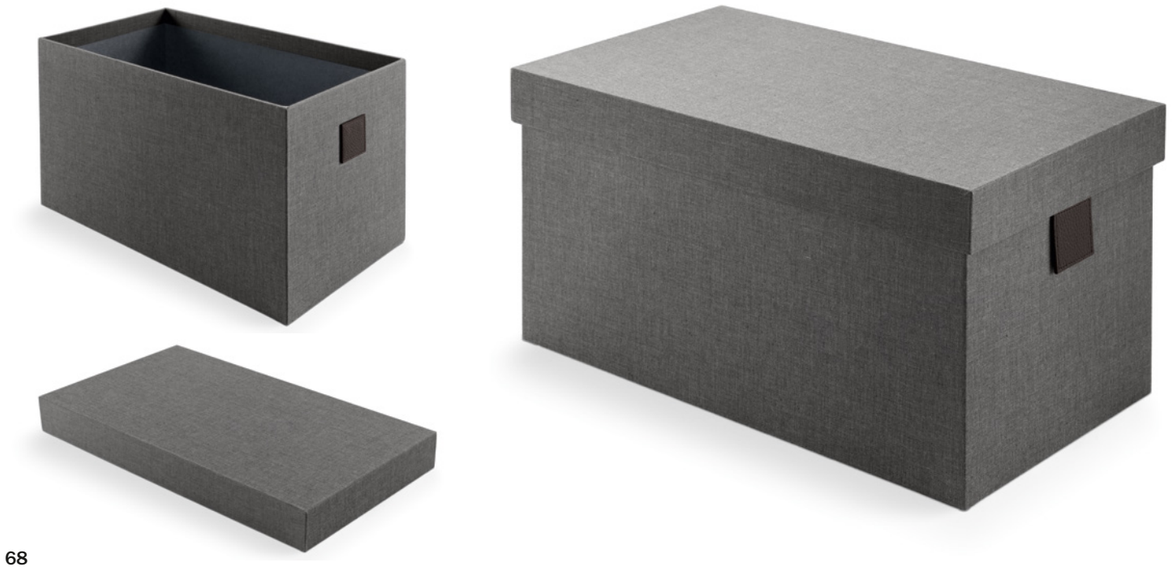

VE80DFCA02__B = Bottom Part number
VE80DFDA02__B = Top Part number
Finish code number on page 71, chart 1

Box
- Material: fabric
- Bottom dimensions (mm): 390x465 H 125
- Top dimensions (mm): 400x480 H 50
- Packing: 3 pieces per box



VE80DFFA02__B = Bottom Part number
Finish code number on page 71, chart 2
VE80DFDA02__B = Top Part number
Finish code number on page 71, chart 1

Box with tab made of imitation leather
- Material: fabric
- Bottom dimensions (mm): 390x465 H 125
- Top dimensions (mm): 400x480 H 50
- Packing: 3 pieces per box

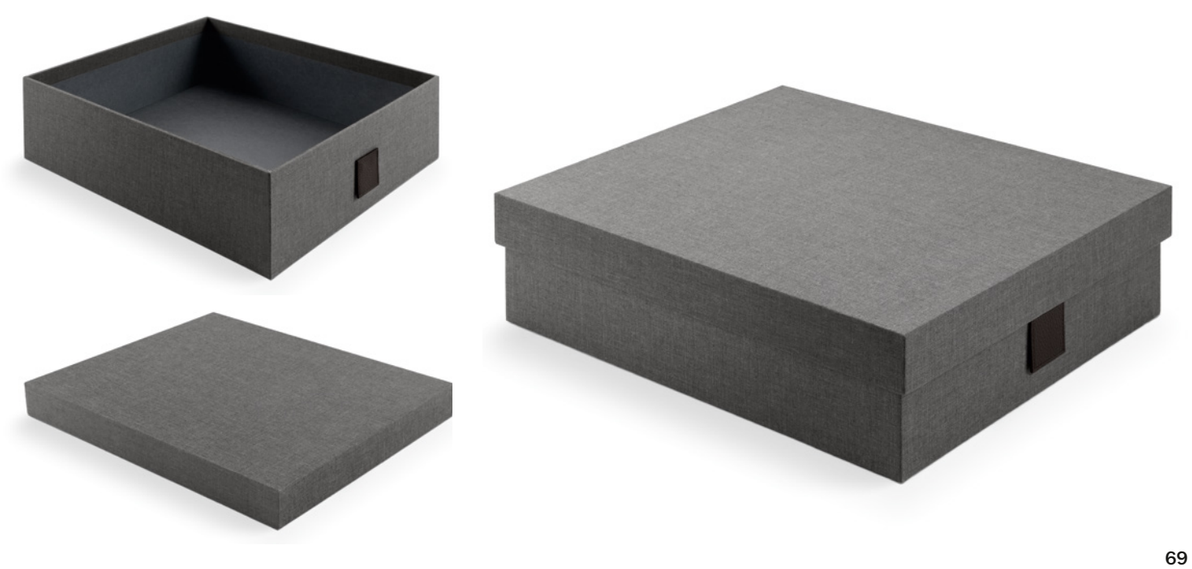

Excessories - contain

VE80DFCA03__B = Bottom Part number
VE80DFDA02__B = Top Part number
Finish code number on page 71, chart 1

Box
- Material: fabric
- Bottom dimensions (mm): 390x465 H 255
- Top dimensions (mm): 400x480 H 50
- Packing: 3 pieces per box





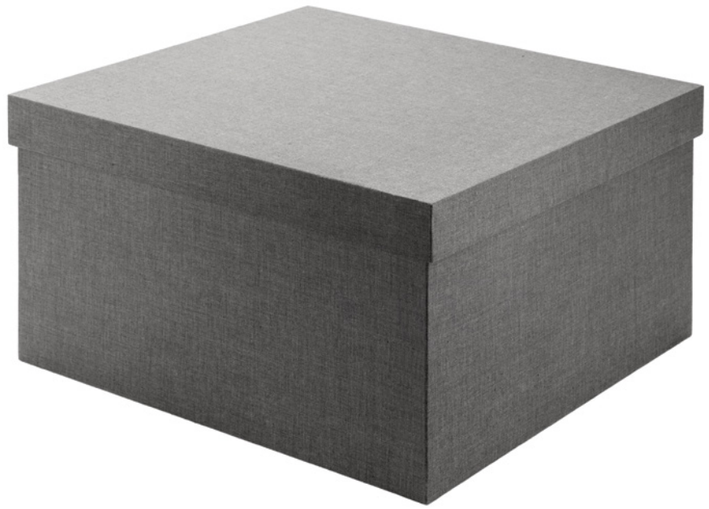

VE80DFFA03__B = Bottom Part number
Finish code number on page 71, chart 2
VE80DFDA02__B = Top Part number
Finish code number on page 71, chart 1

Box with tab made of imitation leather
- Material: fabric
- Bottom dimensions (mm): 390x465 H 255
- Top dimensions (mm): 400x480 H 50
- Packing: 3 pieces per box



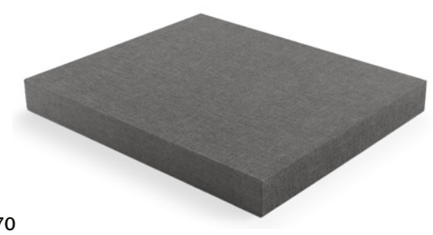



FINISHES

Excessories - contain - Fabric

TASMANIA GREY

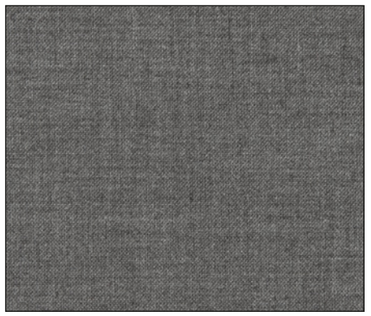

FLAX GREY

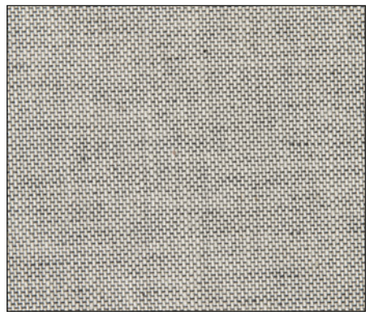

BROWN



SAGE GREEN



PUMPKIN ORANGE



DENIM BLUE

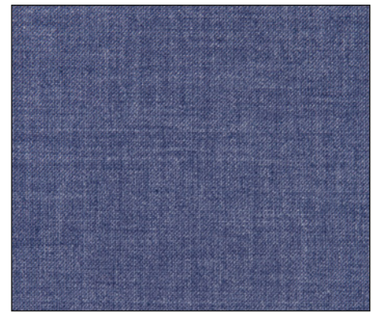

BITTER RED



Code composition (exemple):

V E 8 0 D F C A 0 1 _ _ B

CHART 1	CHART 2
51 = TASMANIA GREY	**C1** = TASMANIA GREY + MOKA BROWN IMITATION LEATHER
52 = FLAX GREY	**C2** = FLAX GREY + MOKA BROWN IMITATION LEATHER
53 = BROWN	**C3** = BROWN + MOKA BROWN IMITATION LEATHER
54 = SAGE GREEN	**C4** = SAGE GREEN + MOKA BROWN IMITATION LEATHER
55 = PUMPKIN ORANGE	**C5** = PUMPKIN ORANGE + MOKA BROWN IMITATION LEATHER
56 = DENIM BLUE	**C6** = DENIM BLUE + MOKA BROWN IMITATION LEATHER
57 = BITTER RED	**C7** = BITTER RED + MOKA BROWN IMITATION LEATHER

FINISHES

The boxes in the collection and their numerous finishes allow multiple combinations and a total personalisation.

Perfectly compatible with wardrobes of any design and material, the bottoms and the tops of the boxes can be freely matched.

Some suggestions for possible combinations









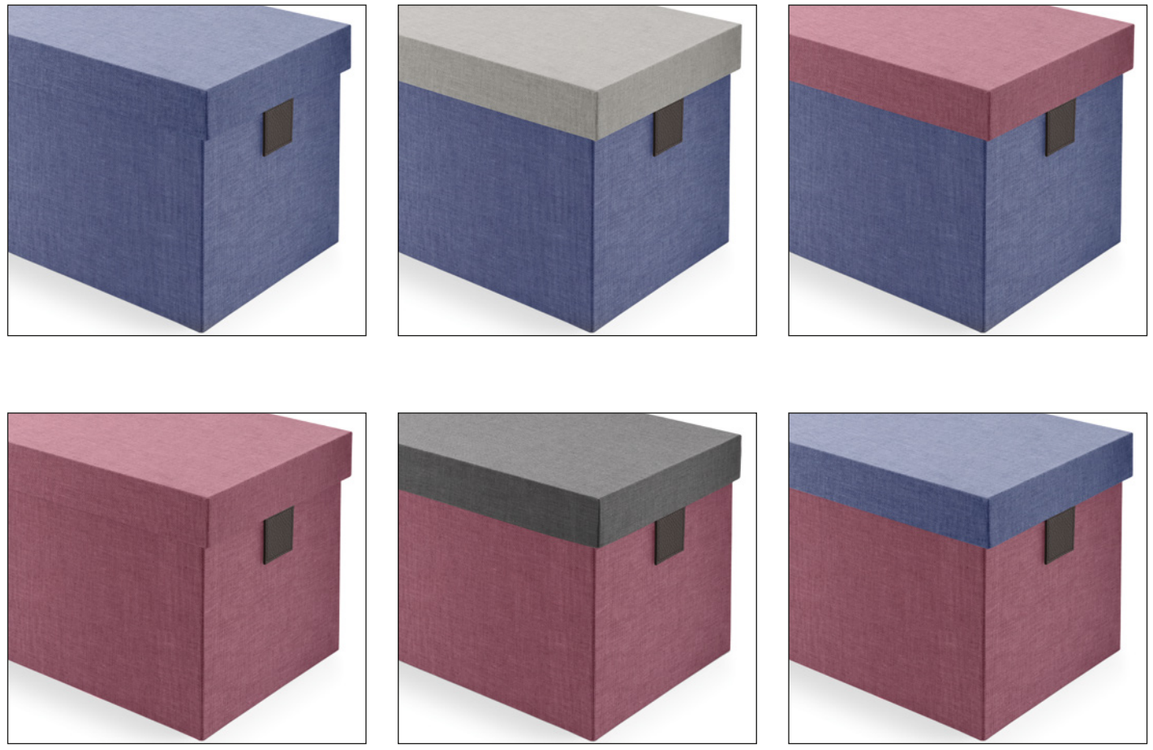

Excessories - pull-out - technical information

4-SIDED drawer

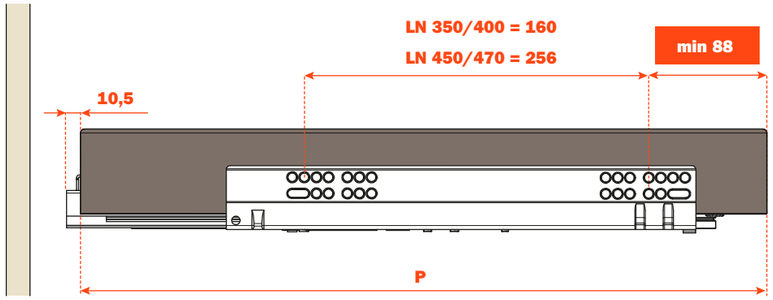

3-SIDED drawer
For wooden frontal, 12 mm thick

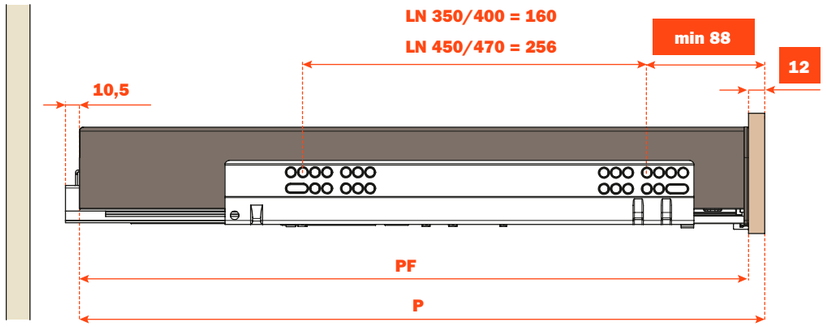

3-SIDED drawer
For glass frontal, 6 mm thick + profile, 6 mm thick

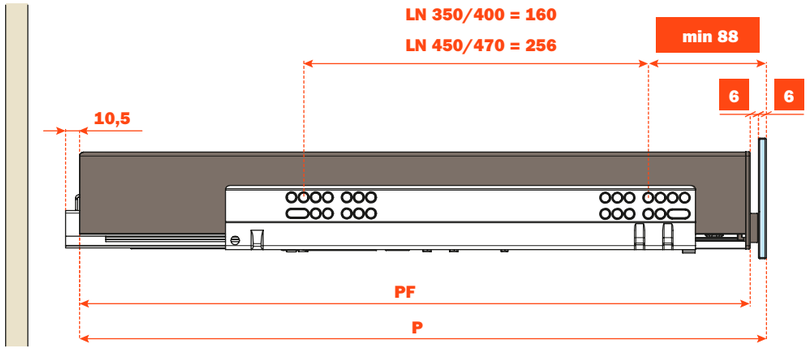

3-SIDED drawer
For wooden frontal, 19 mm thick

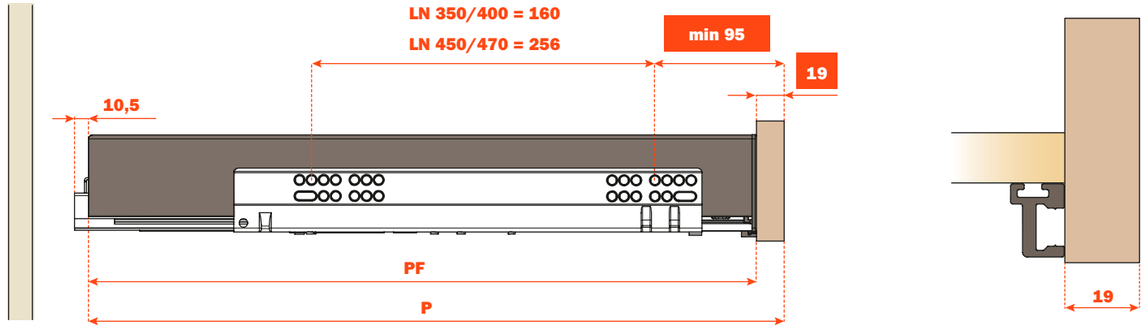

3-SIDED drawer
For glass frontal, 6 mm thick + profile, 13 mm thick

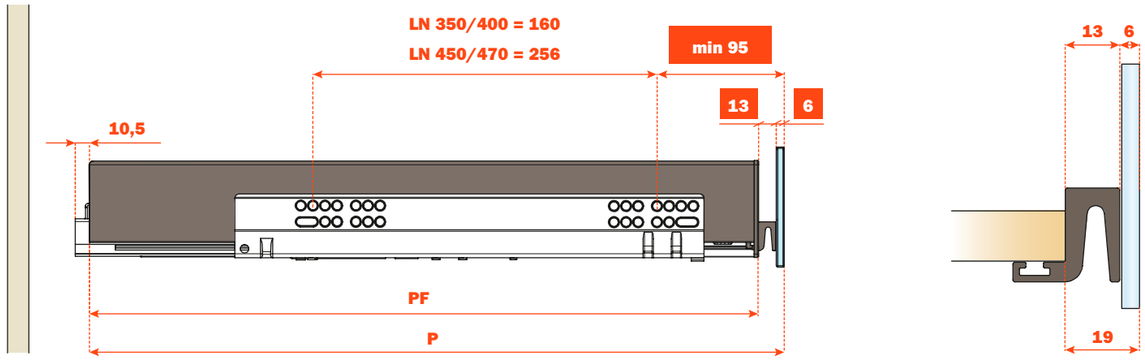

Runner length (LN) mm	Drawer depth (PF) mm	4-SIDED drawer depth (P) mm	3-SIDED drawer depth (P) mm + wooden frontal, 12 mm thick or glass frontal, 6+6 mm thick	3-SIDED drawer depth (P) mm + wooden frontal, 19 mm thick or glass frontal, 6+13 mm thick
350	378	390	390	397
400	428	440	440	447
450	478	490	490	497
470	498	510	510	517

Excessories - pull-out - technical information

Assembly

1. Place the drawer on the runners and close it
2. The flexibility of the fixing system enables the clips to engage
3. Fix the device that prevents the shelf from overturning
4. Locate the rear hooks

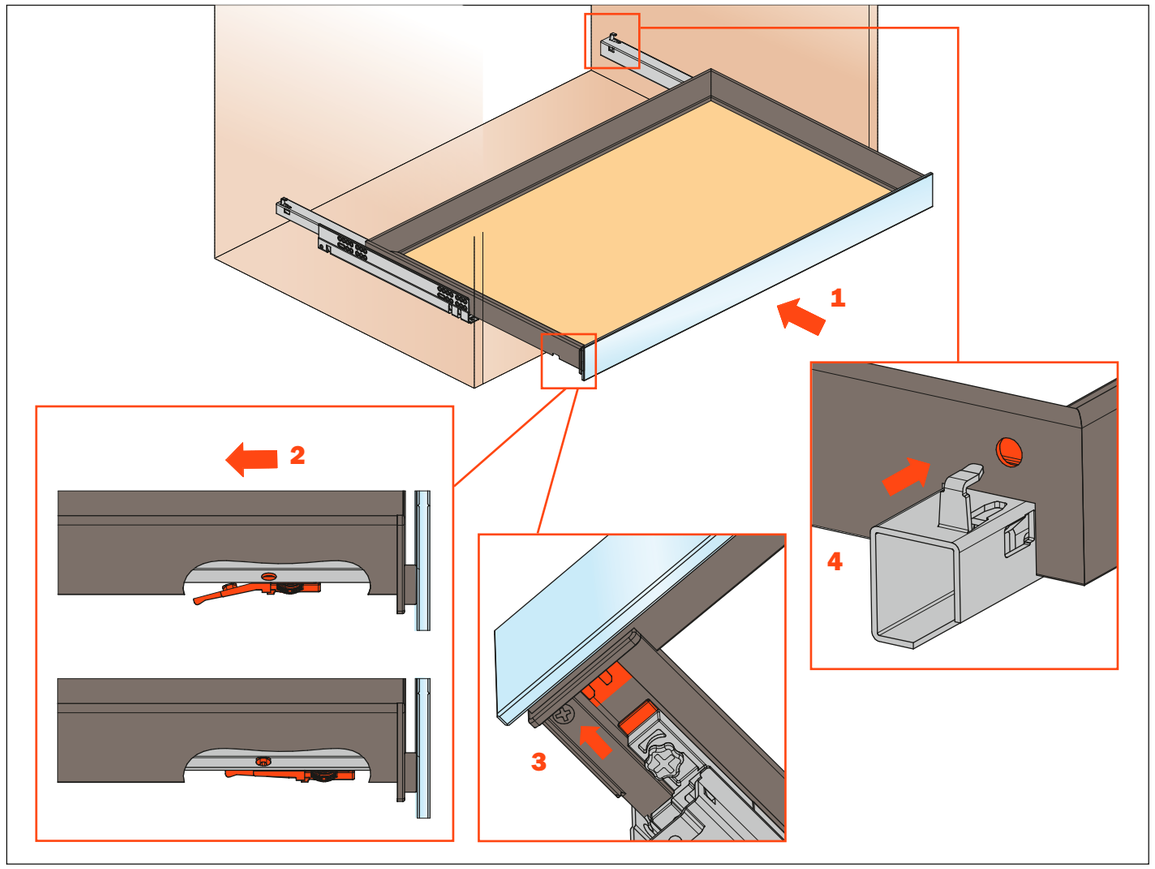

Disassembly

1. Open the drawer

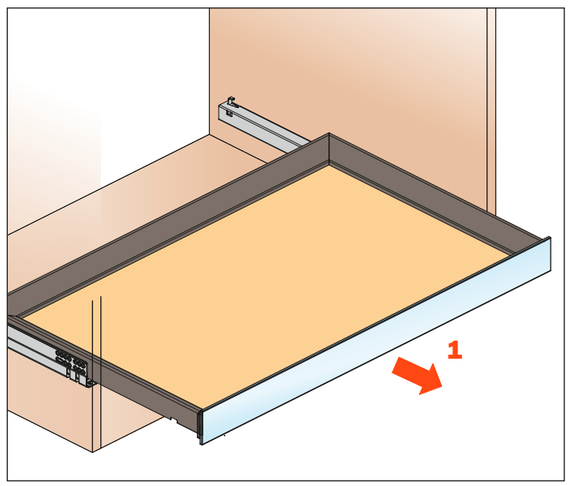

2. Press down the lever indicated here below and pull out the drawer

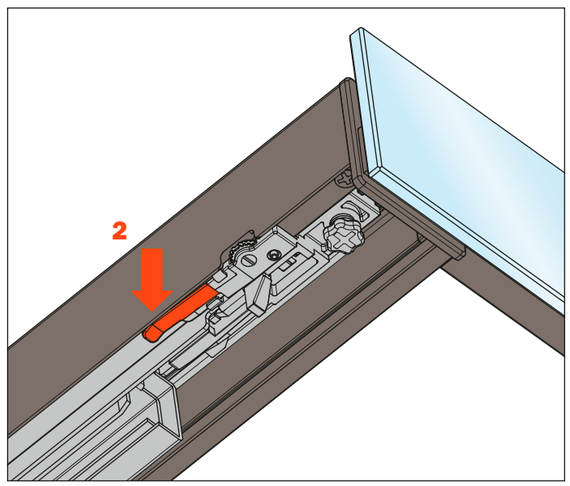

Excessories - pull-out - adjustments

Depth adjustment +2 -2 mm

Rotate the wheel towards the front of the drawer to increase the gap between the front and the side.
Rotate the wheel towards the back of the drawer to reduce the gap between the front and the side.
This operation is tool free.

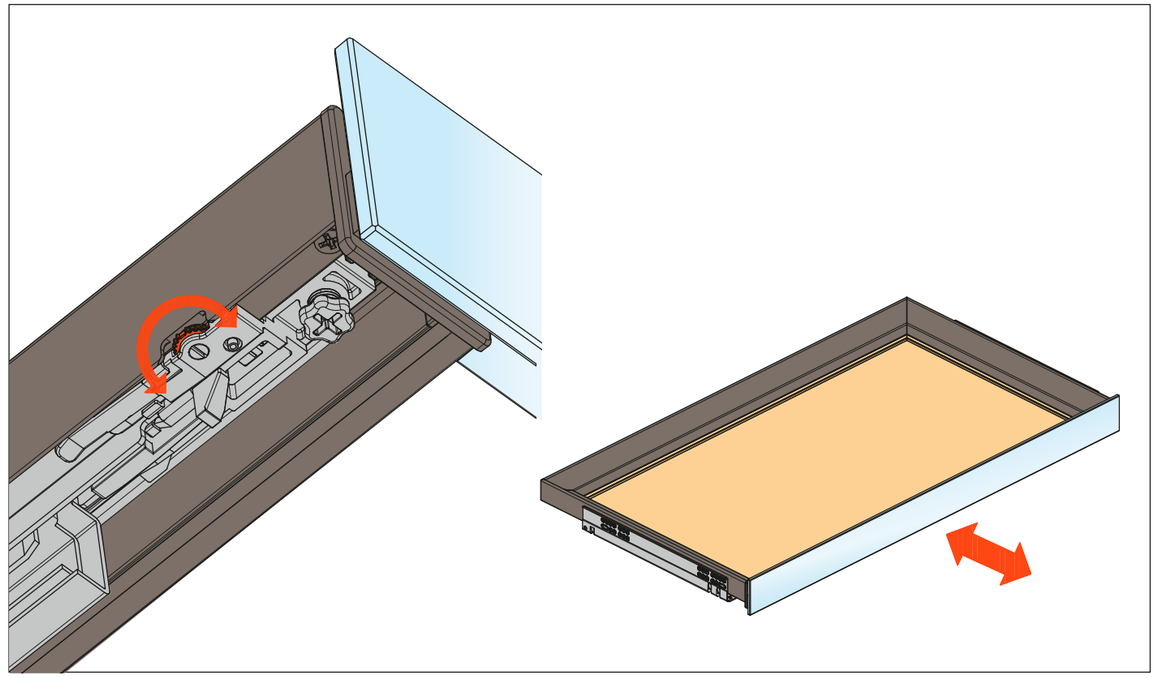

Height adjustment + 5 mm

Rotate the lever towards the front of the drawer for the height adjustment.
This operation is tool free.

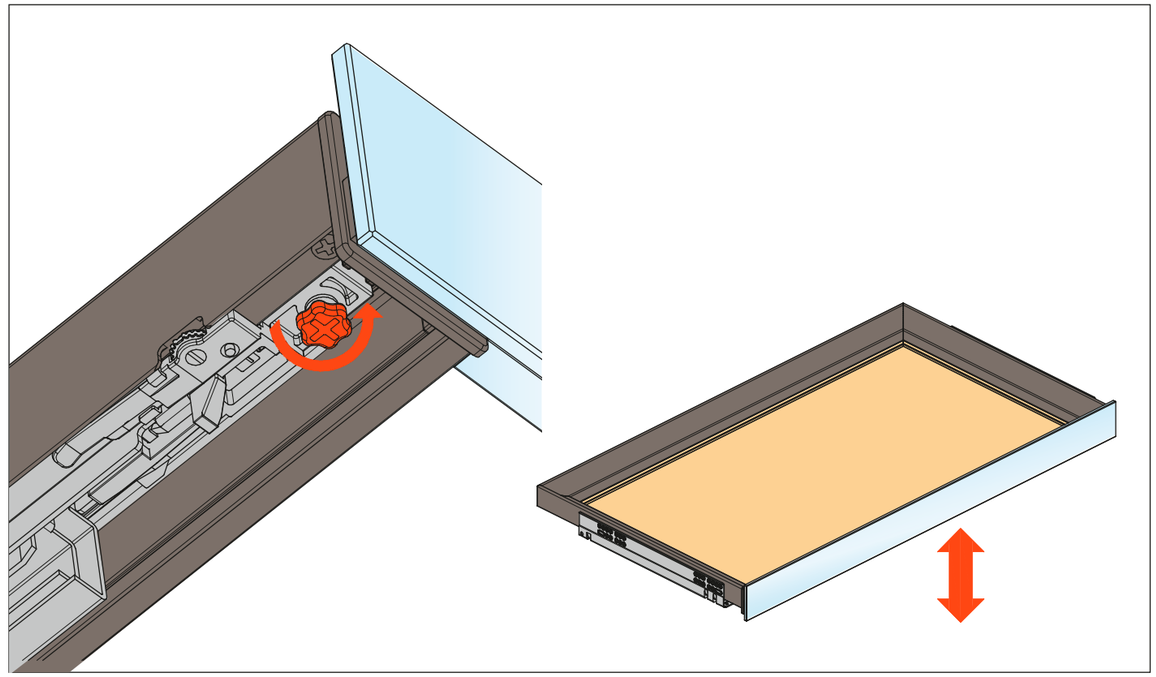

Excessories - pull-out - assembly instructions

WOODEN FRONTAL

1. Screw the first cap to the frontal

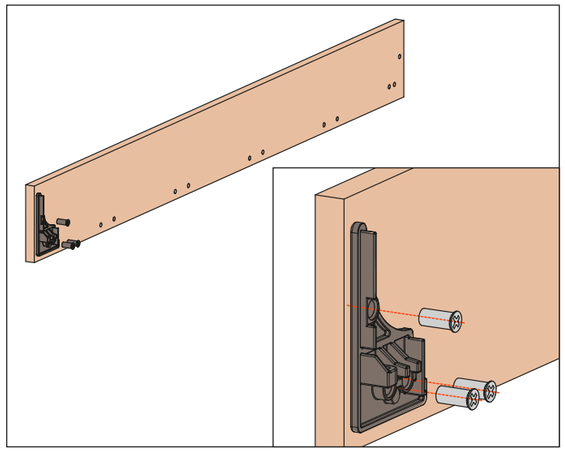

2. Screw the connecting elements to the frontal

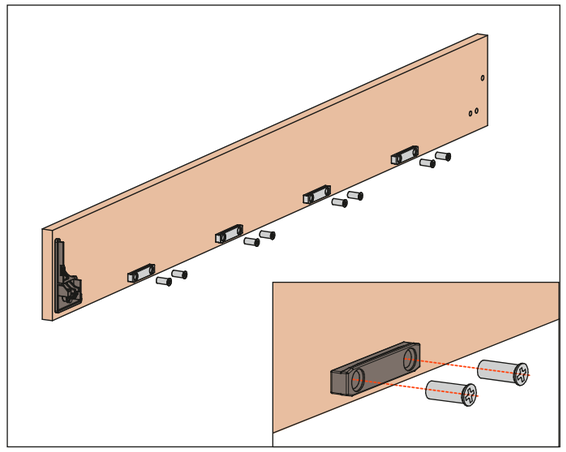

3. Insert and slide the front profile on the connecting elements

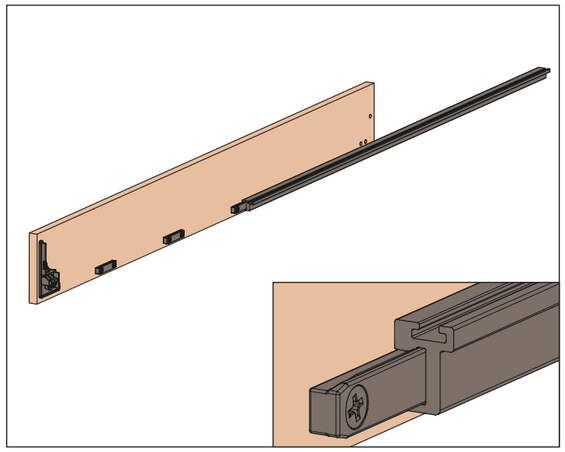

4. Screw the second cap to the frontal

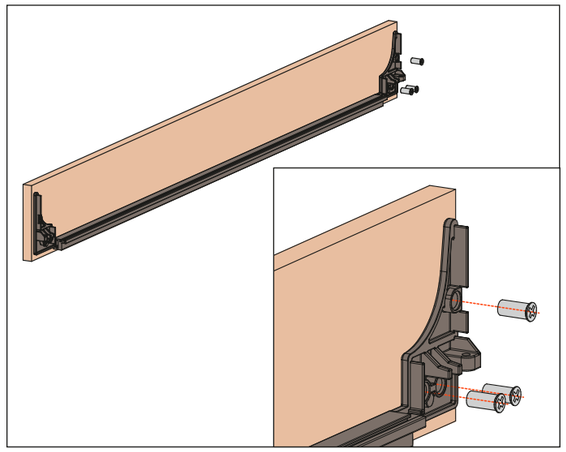

5. Insert the caps in both sides

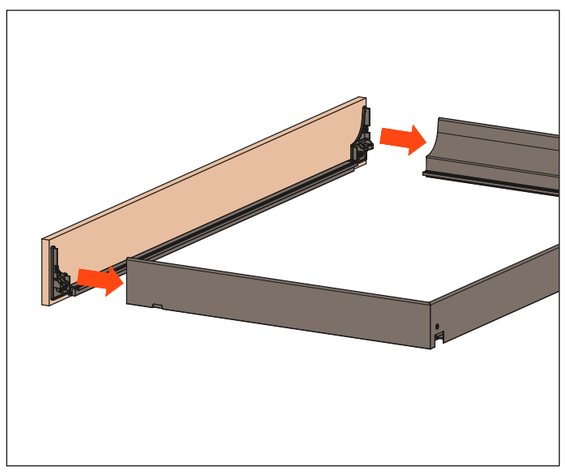

6. Fix the frontal to the drawer

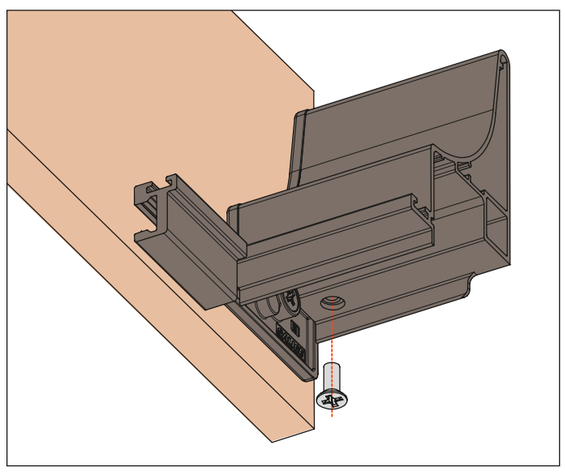

GLASS FRONTAL

1. Screw the caps to the front profile

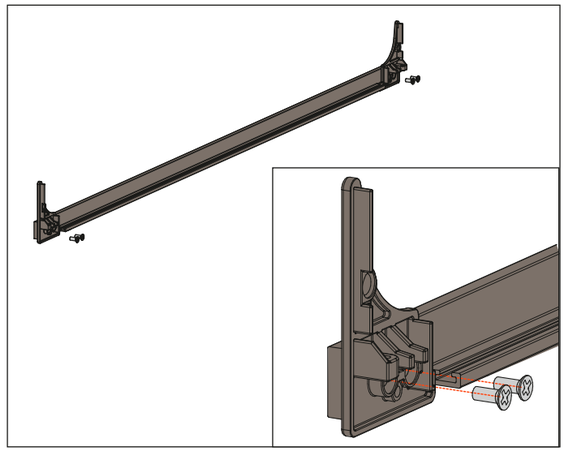

2. Remove the protective film from the adhesive tape that is pre-glued to the profile

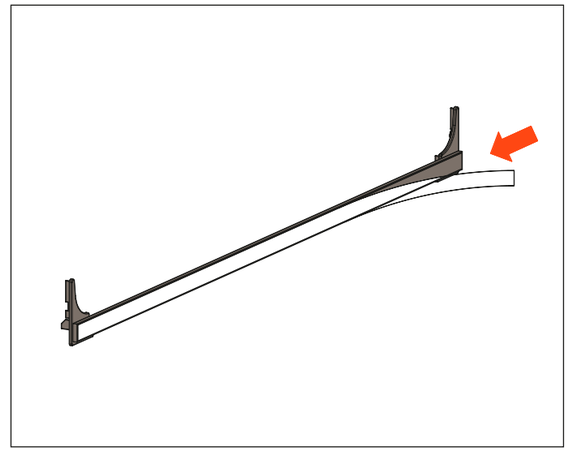

3. Glue the glass frontal to the profile

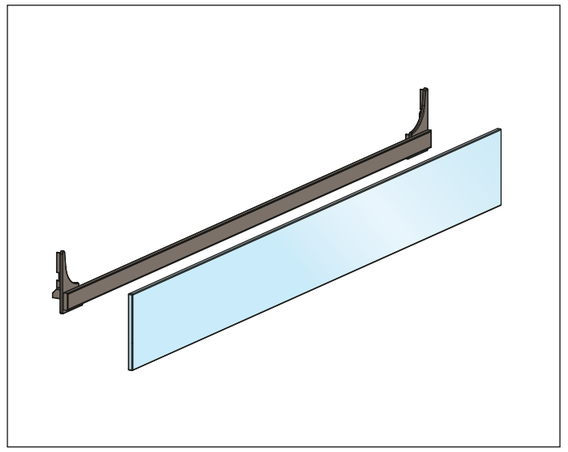

4. Frontal glued

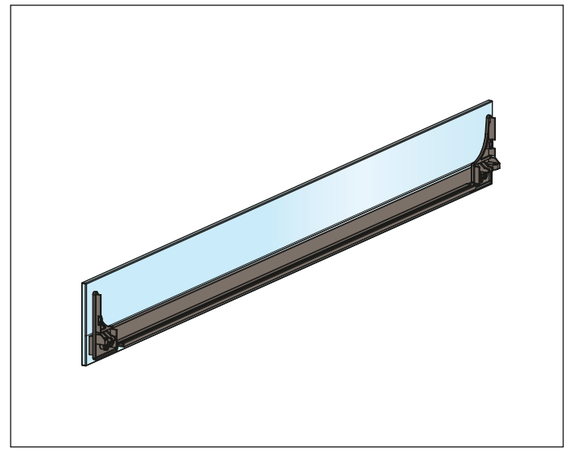

5. Insert the caps in both sides

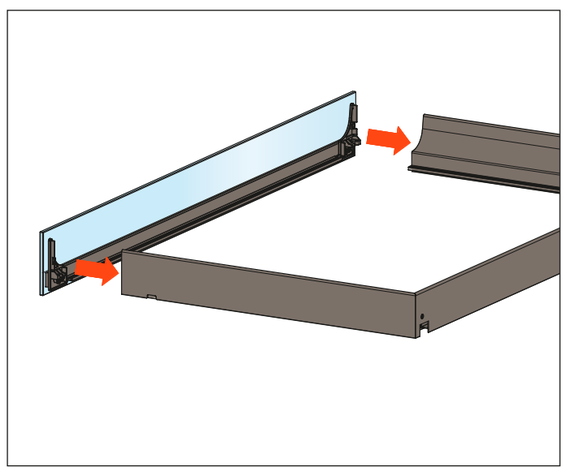

6. Fix the frontal to the drawer

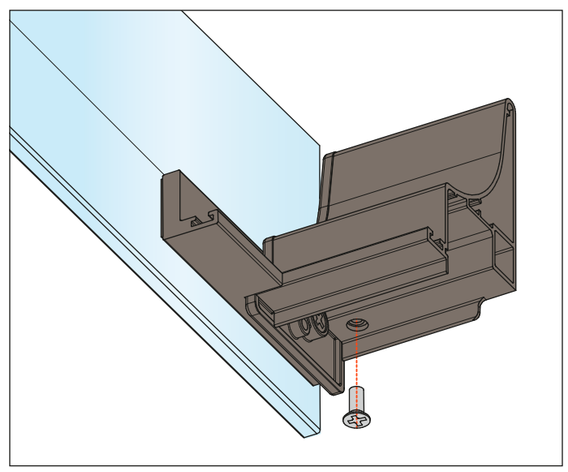

Excessories - pull-out - 3-sided drawer H 52 - for wooden frontal

Aluminium 3-sided drawer H 52
WOODEN FRONTAL H 75

- Profile height: 52 mm
- Max. drawer width: 1500 mm
- Material: aluminium coated with epoxy-based powder
- Finish: metal grey brown
- Equipped with full-extension Futura runners
- Integrated height and depth adjustments
- Equipped with anti-tipping device
- The drawers are supplied assembled complete with the gasket needed to hold in place the drawer bottom and accessories
- Frontal and bottom not included
- Bottom can be made of wood or glass



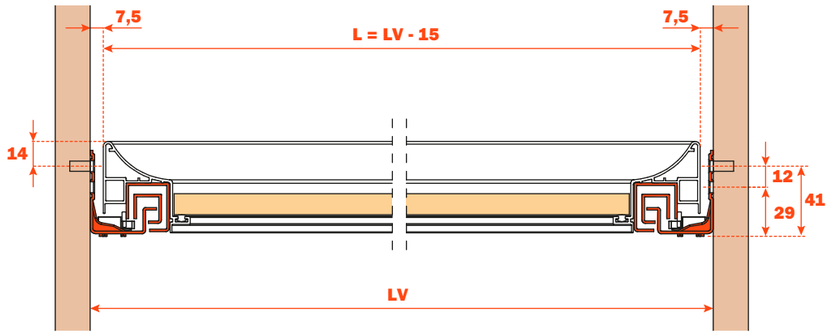

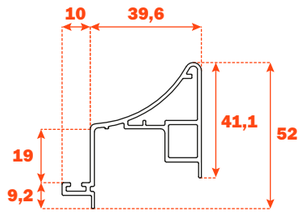

ASSEMBLY WITH WOODEN FRONTAL, 12 mm THICKNESS

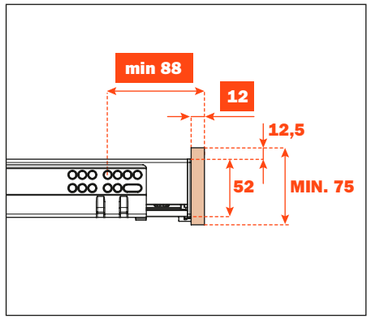

ASSEMBLY WITH WOODEN FRONTAL, 19 mm THICKNESS

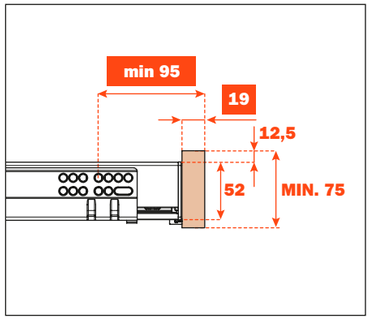

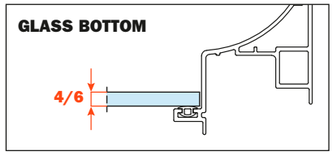

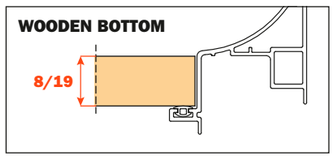

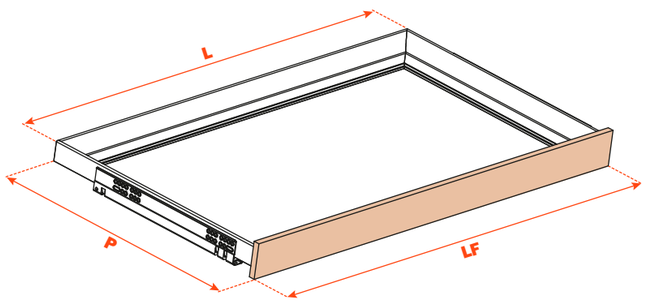

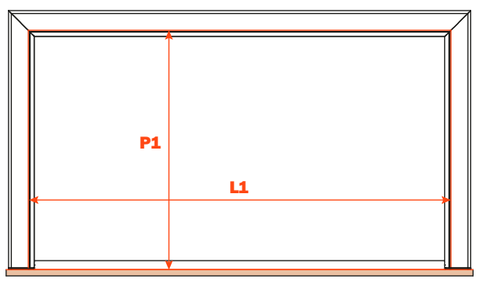

Kit for the frontal fixing (to be ordered separately)

1. 6,3x14 mm TPSV Euro screws
2. Fixing caps
3. Aluminium profile
4. Connecting elements

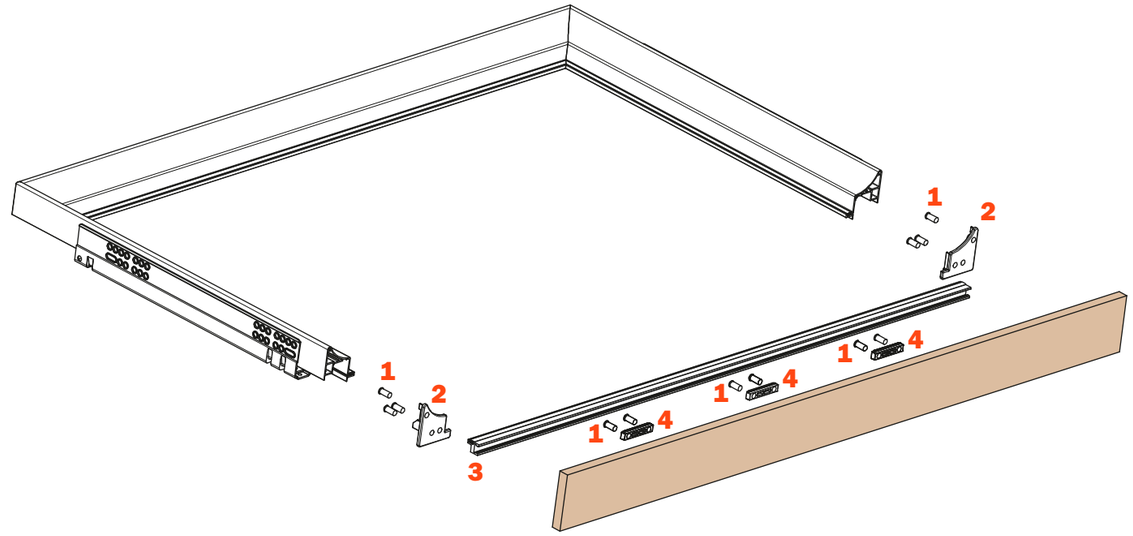

Frontal drilling

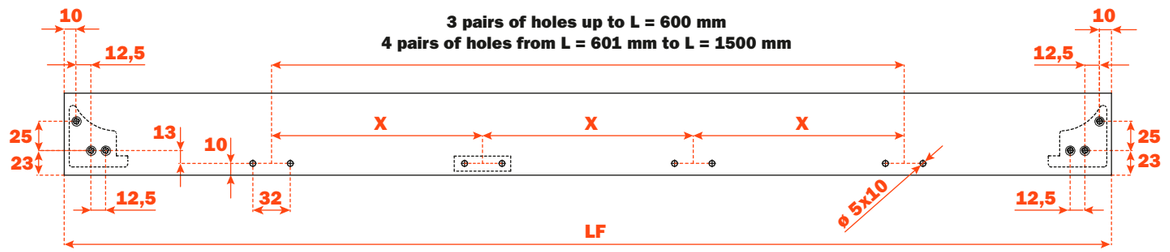

Runner length (LN) mm	Drawer width (L) mm	Frontal width (LF) mm	Internal width (L1) mm	Drawer depth (P) mm + wooden frontal 12 mm	Drawer depth (P) mm + wooden frontal 19 mm	Internal depth (P1) mm
350	LV - 15	LV - 6	L - 80	390	397	338
400				440	447	388
450				490	497	438
470				510	517	458

Excessories - pull-out - 3-sided drawer H 52 - for glass frontal

Aluminium 3-sided drawer H 52
GLASS FRONTAL H 75

- Profile height: 52 mm
- Max. drawer width: 1500 mm
- Material: aluminium coated with epoxy-based powder
- Finish: metal grey brown
- Equipped with full-extension Futura runners
- Integrated height and depth adjustments
- Equipped with anti-tipping device
- The drawers are supplied assembled complete with the gasket needed to hold in place the drawer bottom and accessories
- Glass frontal upon request, bottom not included
- Bottom can be made of wood or glass



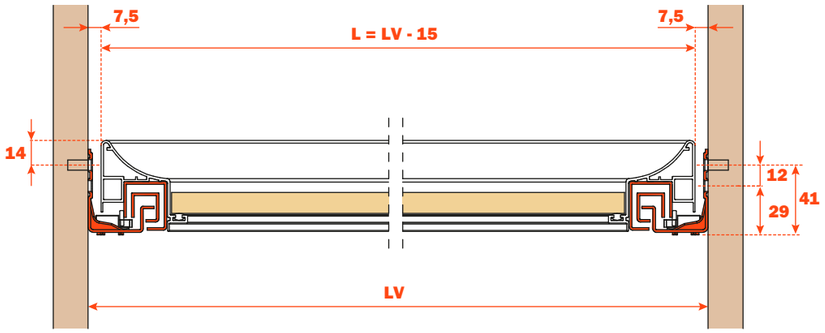

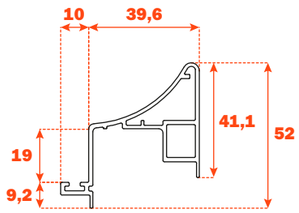

ASSEMBLY WITH ALUMINIUM PROFILE 6 mm THICKNESS. ALIGNMENT WITH WOODEN FRONTAL 12 mm THICKNESS

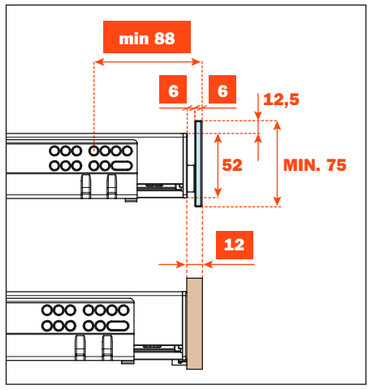

ASSEMBLY WITH ALUMINIUM PROFILE 13 mm THICKNESS. ALIGNMENT WITH WOODEN FRONTAL 19 mm THICKNESS

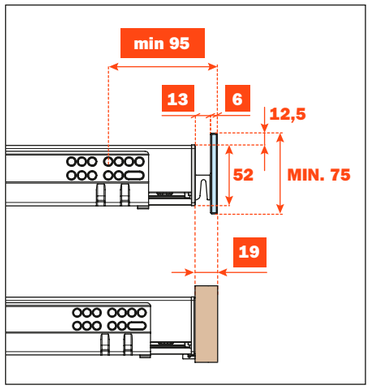

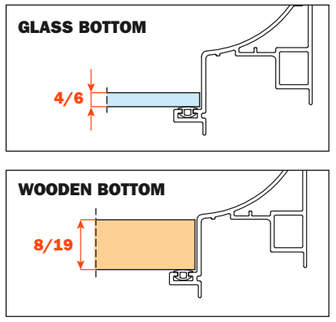

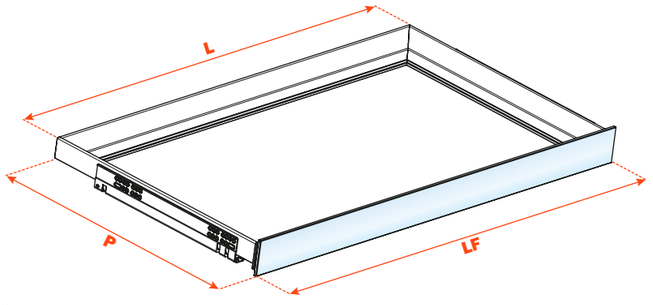

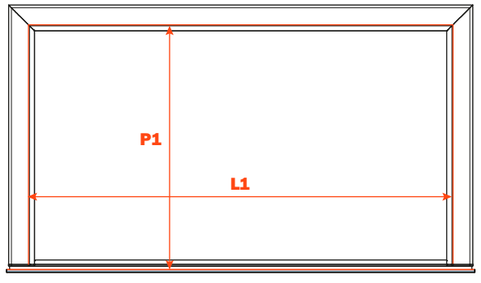

Kit for the frontal fixing (to be ordered separately)

1. M 4x10 mm screws
2. Fixing caps
3. Aluminium profile with adhesive tape for fixing on the frontal

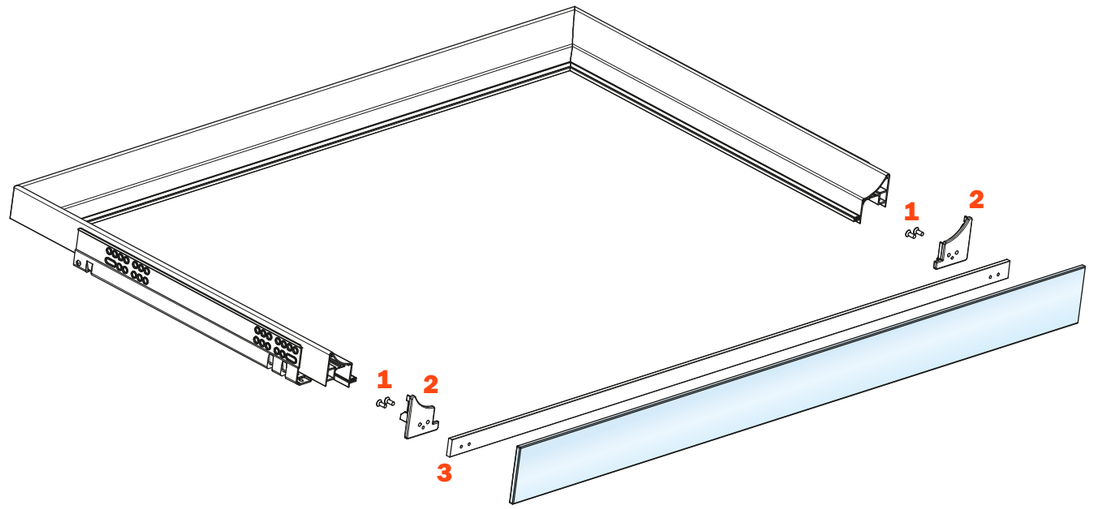

Fixing the profile to the frontal

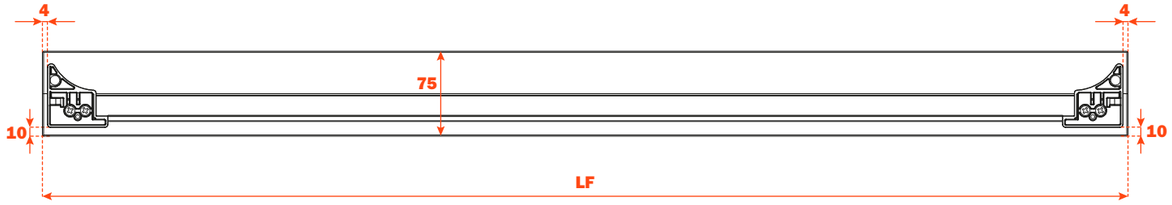

GLASS FRONTAL, 6 mm THICKNESS - ALUMINIUM PROFILE, 6 mm THICKNESS

Runner length (LN) mm	Drawer width (L) mm	Frontal width (LF) mm	Internal width (L1) mm	Drawer depth (P) mm	Internal depth (P1) mm
350	LV - 15	LV - 6	L - 80	390	338
400				440	388
450				490	438
470				510	458

GLASS FRONTAL, 6 mm THICKNESS - ALUMINIUM PROFILE, 13 mm THICKNESS

Runner length (LN) mm	Drawer width (L) mm	Frontal width (LF) mm	Internal width (L1) mm	Drawer depth (P) mm	Internal depth (P1) mm
350	LV - 15	LV - 6	L - 80	397	338
400				447	388
450				497	438
470				517	458

Excessories - pull-out - 3-sided drawer H 78 - for wooden frontal

Aluminium 3-sided drawer H 78
WOODEN FRONTAL H 100

- Profile height: 78 mm
- Max. drawer width: 1500 mm
- Material: aluminium coated with epoxy-based powder
- Finish: metal grey brown
- Equipped with full-extension Futura runners
- Integrated height and depth adjustments
- Equipped with anti-tipping device
- The drawers are supplied assembled complete with the gasket needed to hold in place the drawer bottom and accessories
- Frontal and bottom not included
- Bottom can be made of wood or glass



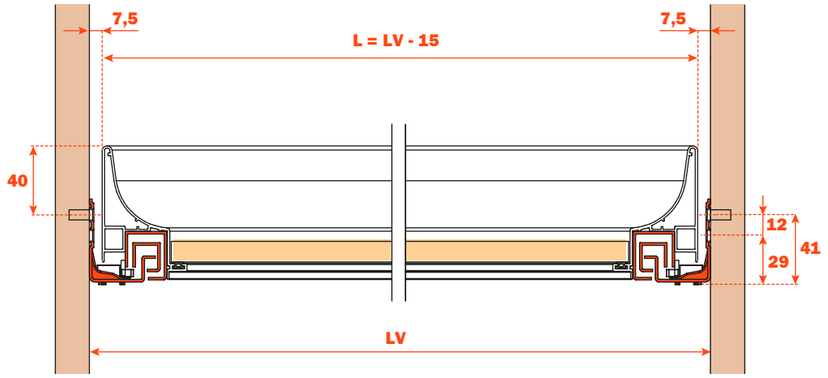

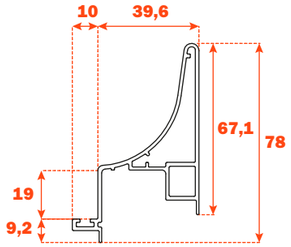

ASSEMBLY WITH WOODEN FRONTAL, 12 mm THICKNESS

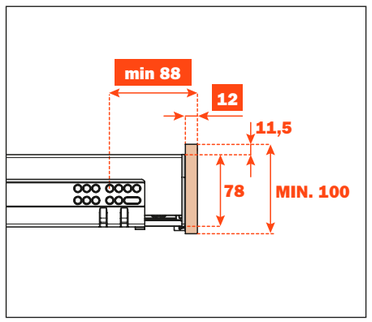

ASSEMBLY WITH WOODEN FRONTAL, 19 mm THICKNESS

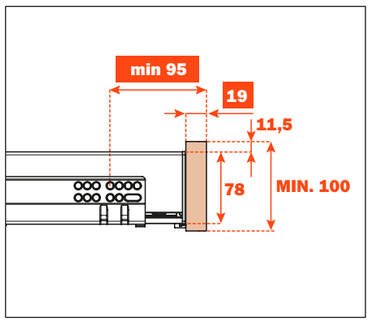

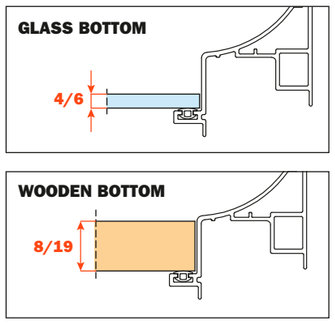

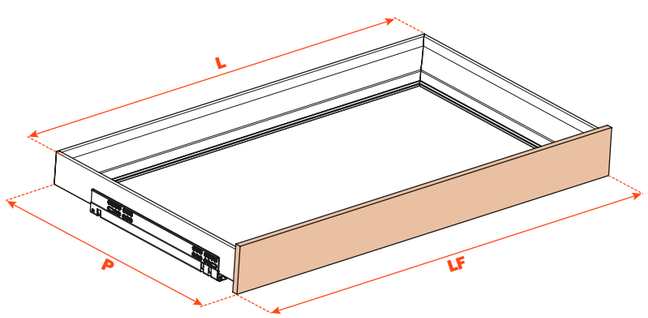

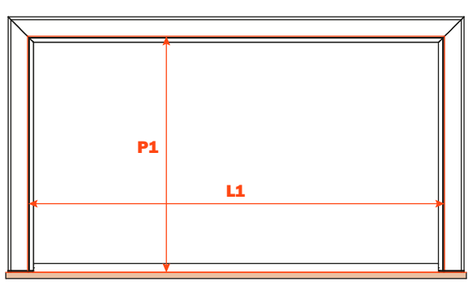

Kit for the frontal fixing (to be ordered separately)

1. 6,3x14 mm TPSV Euro screws
2. Fixing caps
3. Aluminium profile
4. Connecting elements

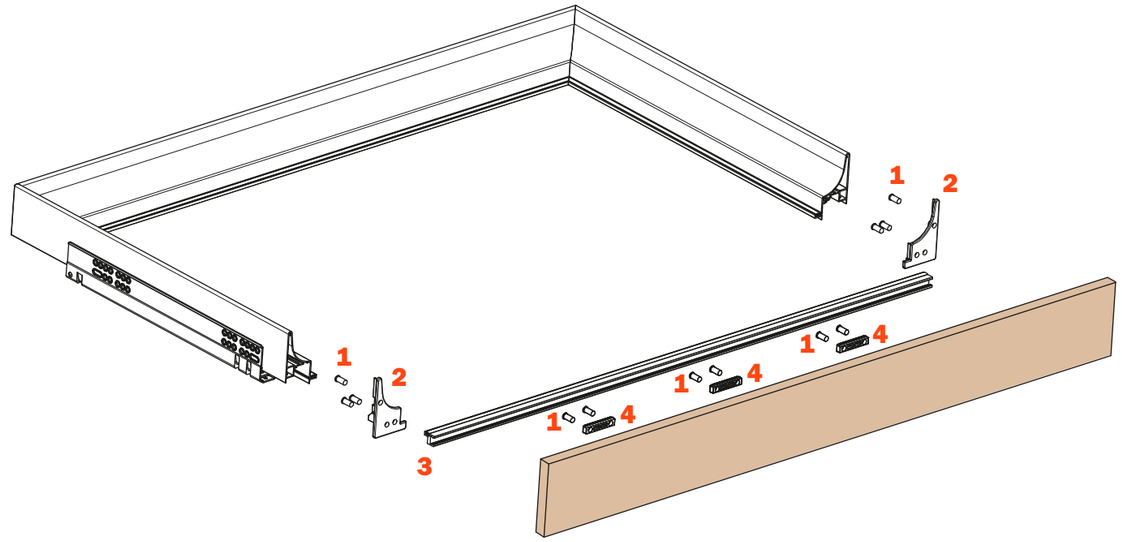

Frontal drilling

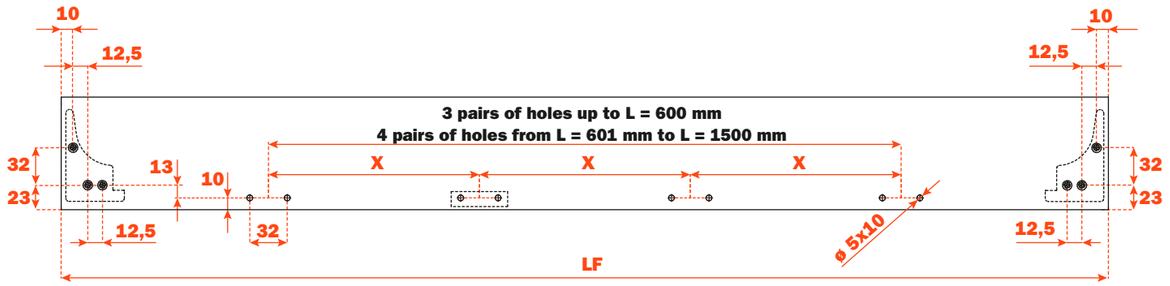

Runner length (LN) mm	Drawer width (L) mm	Frontal width (LF) mm	Internal width (L1) mm	Drawer depth (P) mm + wooden frontal 12 mm	Drawer depth (P) mm + wooden frontal 19 mm	Internal depth (P1) mm
350	LV - 15	LV - 6	L - 80	390	397	338
400				440	447	388
450				490	497	438
470				510	517	458

Excessories - pull-out - 3-sided drawer H 78 - for glass frontal

Aluminium 3-sided drawer H 78
GLASS FRONTAL H 100

- Profile height: 78 mm
- Max. drawer width: 1500 mm
- Material: aluminium coated with epoxy-based powder
- Finish: metal grey brown
- Equipped with full-extension Futura runners
- Integrated height and depth adjustments
- Equipped with anti-tipping device
- The drawers are supplied assembled complete with the gasket needed to hold in place the drawer bottom and accessories
- Glass frontal upon request, bottom not included
- Bottom can be made of wood or glass



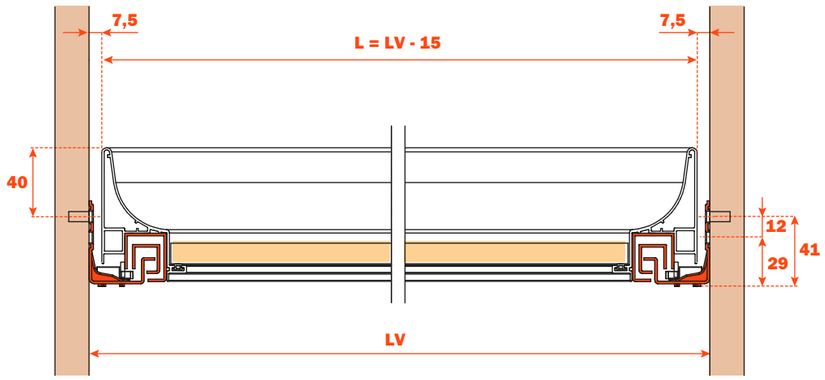

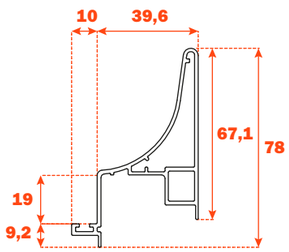

ASSEMBLY WITH ALUMINIUM PROFILE 6 mm THICKNESS. ALIGNMENT WITH WOODEN FRONTAL 12 mm THICKNESS

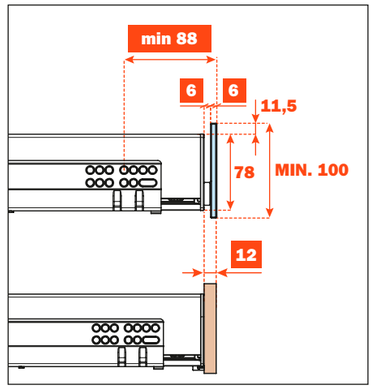

ASSEMBLY WITH ALUMINIUM PROFILE 13 mm THICKNESS. ALIGNMENT WITH WOODEN FRONTAL 19 mm THICKNESS

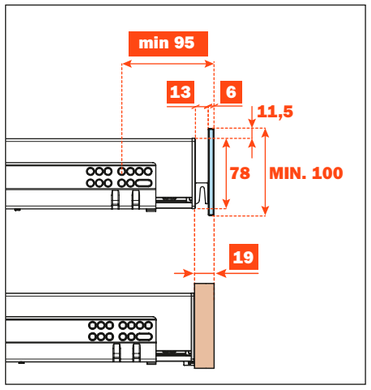

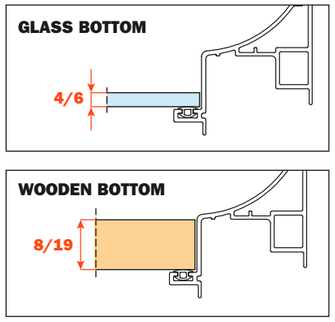

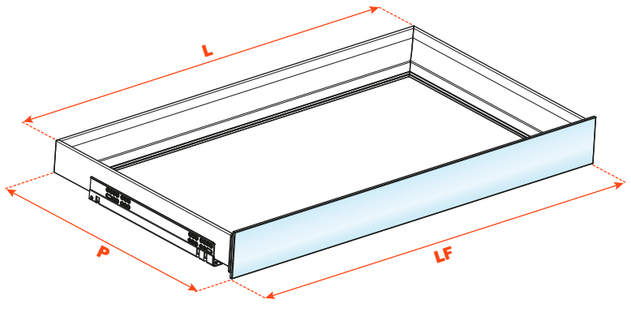

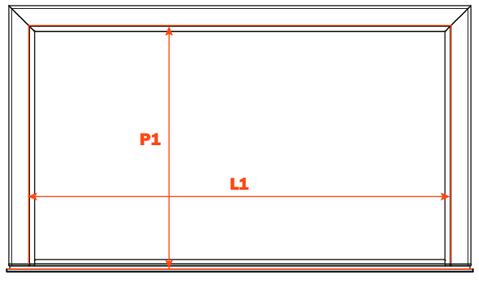

Kit for the frontal fixing (to be ordered separately)

1. M 4x10 mm screws
2. Fixing caps
3. Aluminium profile with adhesive tape for fixing on the frontal

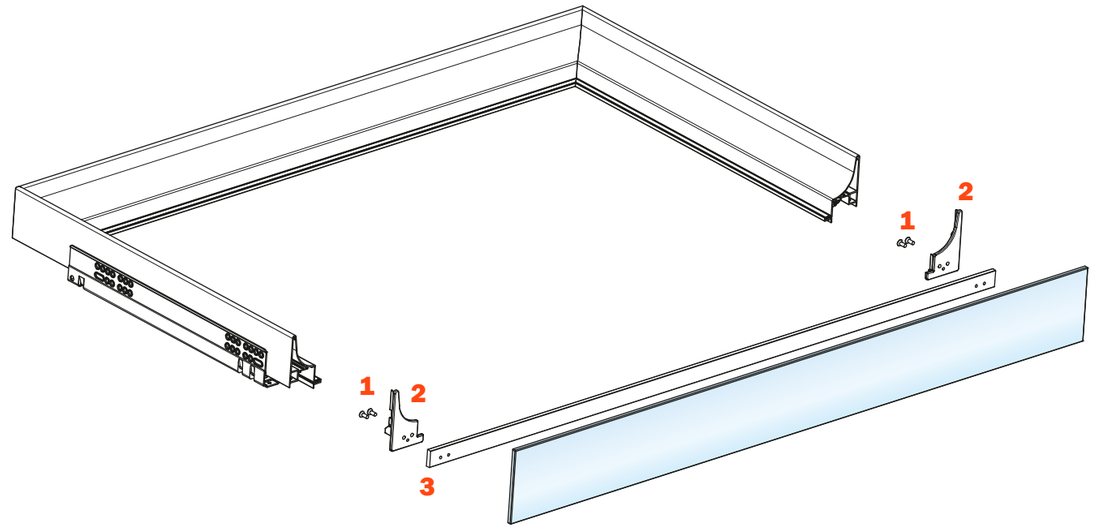

Fixing the profile to the frontal

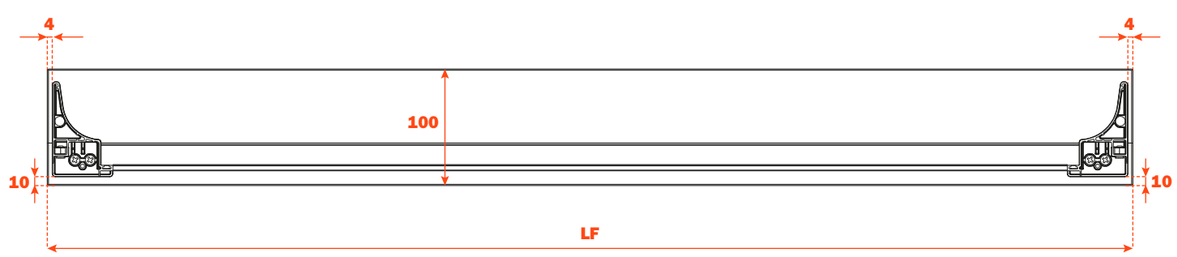

GLASS FRONTAL, 6 mm THICKNESS - ALUMINIUM PROFILE, 6 mm THICKNESS

Runner length (LN) mm	Drawer width (L) mm	Frontal width (LF) mm	Internal width (L1) mm	Drawer depth (P) mm	Internal depth (P1) mm
350	LV - 15	LV - 6	L - 80	390	338
400				440	388
450				490	438
470				510	458

GLASS FRONTAL, 6 mm THICKNESS - ALUMINIUM PROFILE, 13 mm THICKNESS

Runner length (LN) mm	Drawer width (L) mm	Frontal width (LF) mm	Internal width (L1) mm	Drawer depth (P) mm	Internal depth (P1) mm
350	LV - 15	LV - 6	L - 80	397	338
400				447	388
450				497	438
470				517	458

Excessories - pull-out - 3-sided drawer H 128 - for wooden frontal

Aluminium 3-sided drawer H 128
WOODEN FRONTAL H 150

- Profile height: 128 mm
- Max. drawer width: 1500 mm
- Material: aluminium coated with epoxy-based powder
- Finish: metal grey brown
- Equipped with full-extension Futura runners
- Integrated height and depth adjustments
- Equipped with anti-tipping device
- The drawers are supplied assembled complete with the gasket needed to hold in place the drawer bottom and accessories
- Frontal and bottom not included
- Bottom can be made of wood or glass



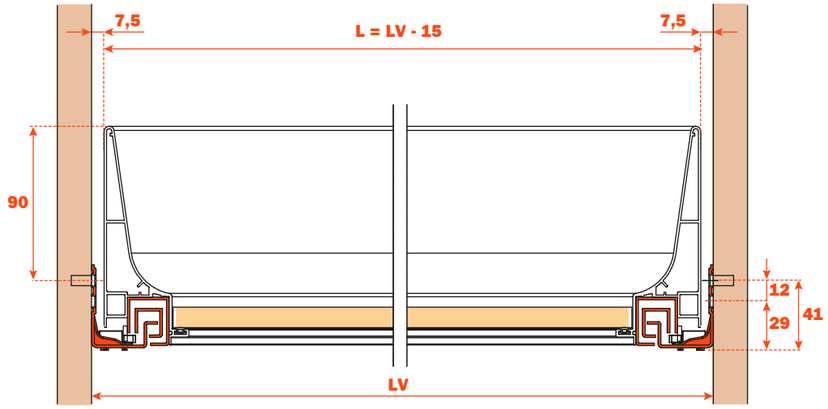

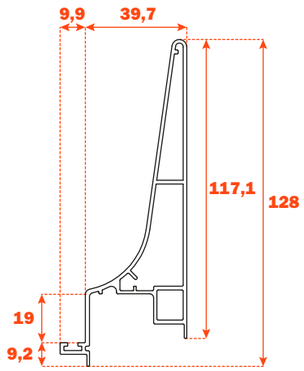

ASSEMBLY WITH WOODEN FRONTAL, 12 mm THICKNESS

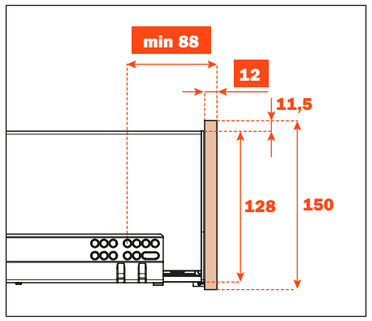

ASSEMBLY WITH WOODEN FRONTAL, 19 mm THICKNESS

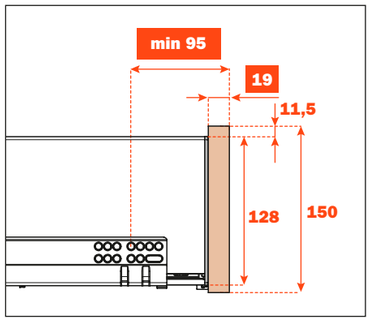

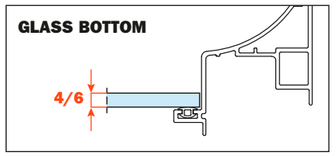

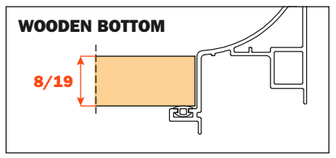

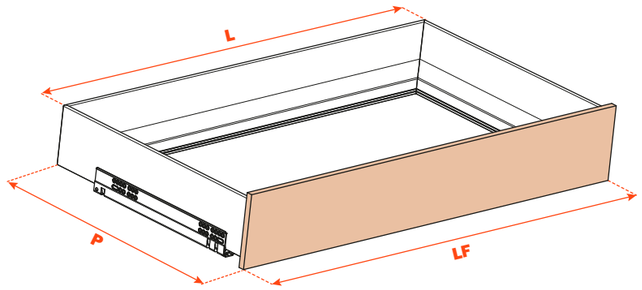

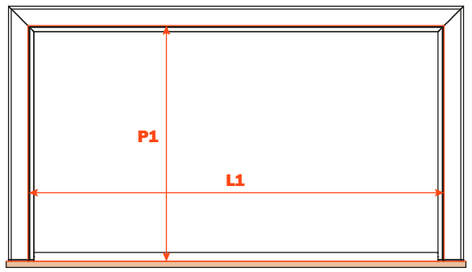

Kit for the frontal fixing (to be ordered separately)

1. 6,3x14 mm TPSV Euro screws
2. Fixing caps
3. Aluminium profile
4. Connecting elements

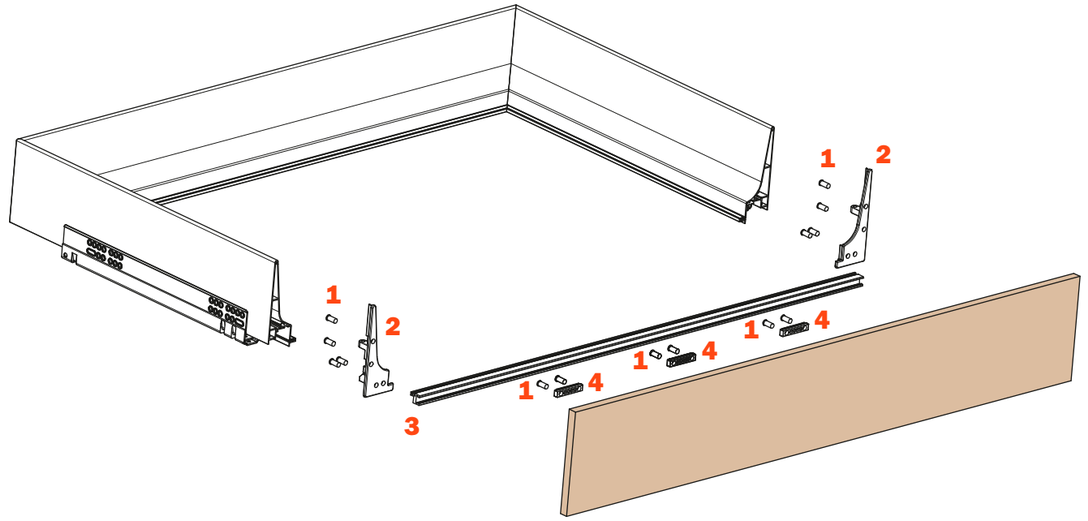

Frontal drilling

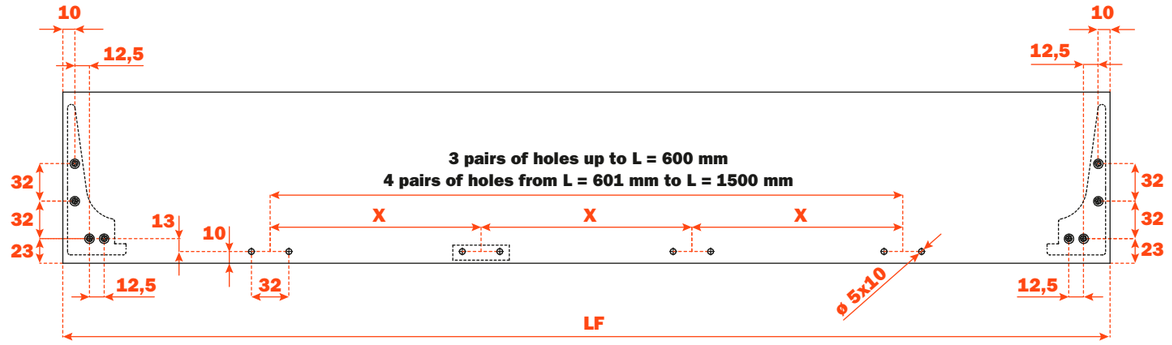

Runner length (LN) mm	Drawer width (L) mm	Frontal width (LF) mm	Internal width (L1) mm	Drawer depth (P) mm + wooden frontal 12 mm	Drawer depth (P) mm + wooden frontal 19 mm	Internal depth (P1) mm
350	LV - 15	LV - 6	L - 80	390	397	338
400				440	447	388
450				490	497	438
470				510	517	458

Excessories - pull-out - 3-sided drawer H 128 - for glass frontal

Aluminium 3-sided drawer H 128
GLASS FRONTAL H 150

- Profile height: 128 mm
- Max. drawer width: 1500 mm
- Material: aluminium coated with epoxy-based powder
- Finish: metal grey brown
- Equipped with full-extension Futura runners
- Integrated height and depth adjustments
- Equipped with anti-tipping device
- The drawers are supplied assembled complete with the gasket needed to hold in place the drawer bottom and accessories
- Glass frontal upon request, bottom not included
- Bottom can be made of wood or glass



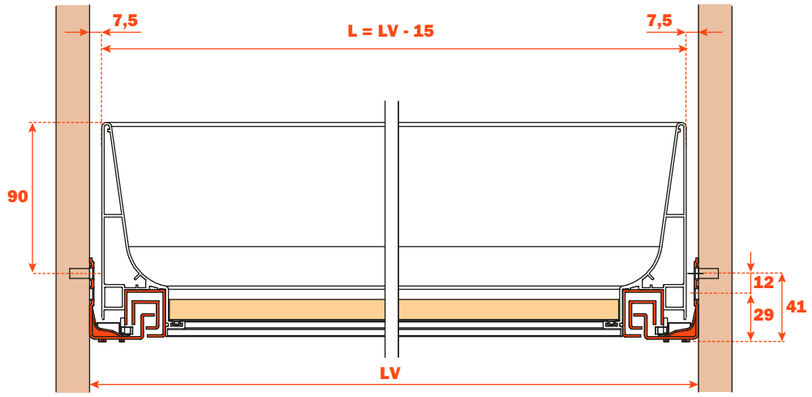

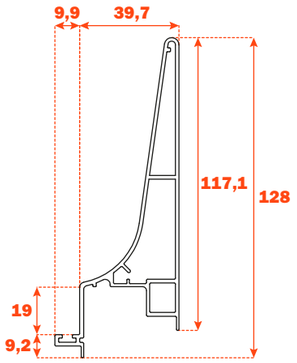

ASSEMBLY WITH ALUMINIUM PROFILE 6 mm THICKNESS. ALIGNMENT WITH WOODEN FRONTAL 12 mm THICKNESS

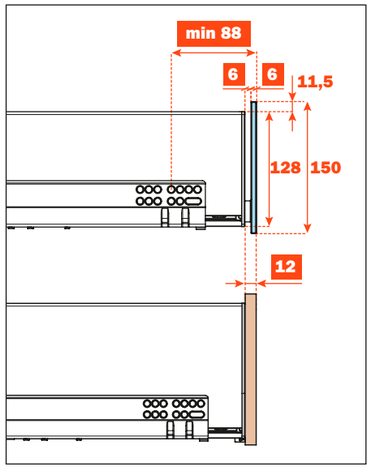

ASSEMBLY WITH ALUMINIUM PROFILE 13 mm THICKNESS. ALIGNMENT WITH WOODEN FRONTAL 19 mm THICKNESS

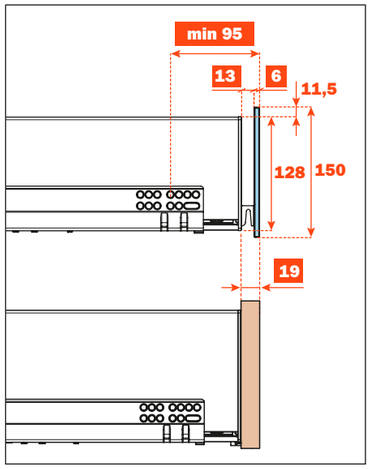

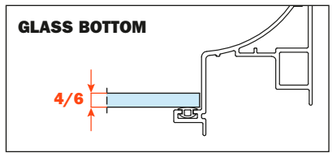

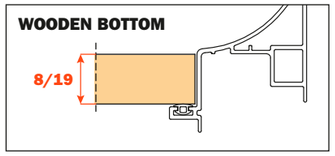

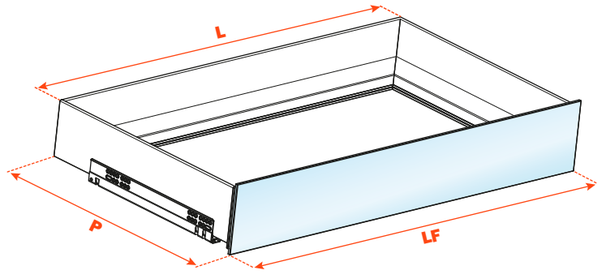

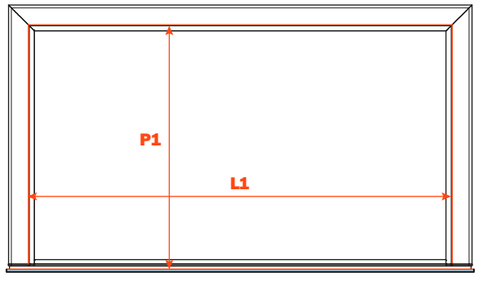

Kit for the frontal fixing (to be ordered separately)

1. M 4x10 mm screws
2. Fixing caps
3. Aluminium profile with adhesive tape for fixing on the frontal

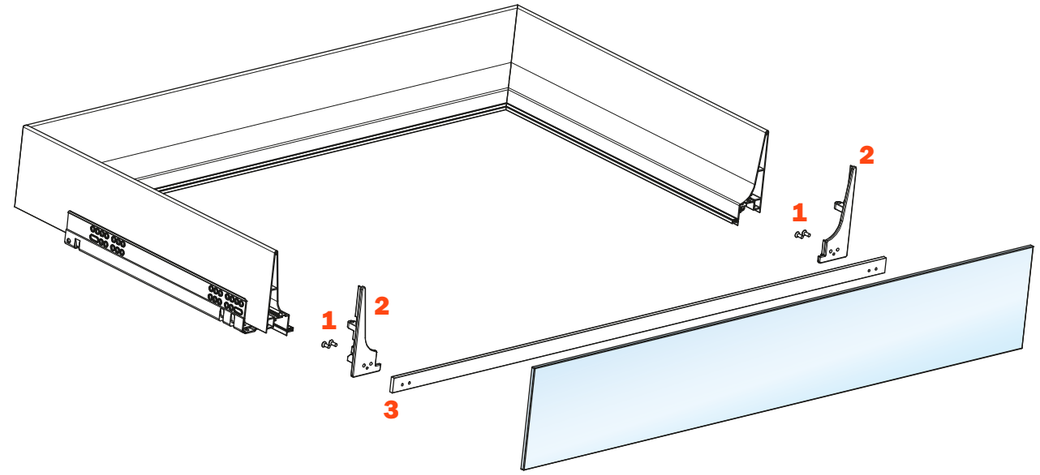

Fixing the profile to the frontal

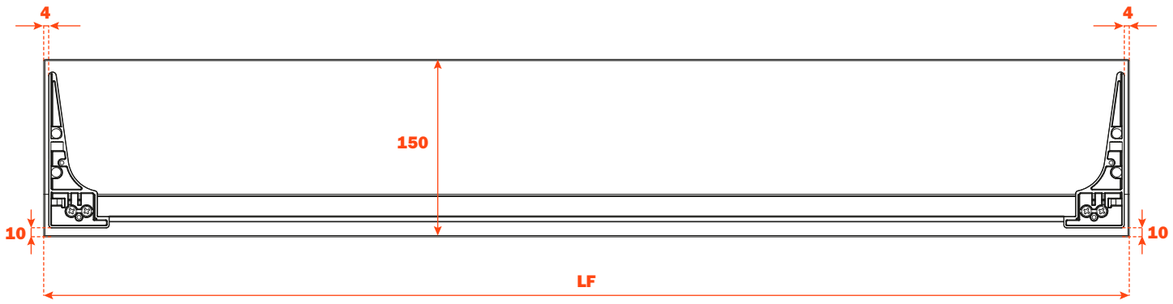

GLASS FRONTAL, 6 mm THICKNESS - ALUMINIUM PROFILE, 6 mm THICKNESS

Runner length (LN) mm	Drawer width (L) mm	Frontal width (LF) mm	Internal width (L1) mm	Drawer depth (P) mm	Internal depth (P1) mm
350	LV - 15	LV - 6	L - 80	390	338
400				440	388
450				490	438
470				510	458

GLASS FRONTAL, 6 mm THICKNESS - ALUMINIUM PROFILE, 13 mm THICKNESS

Runner length (LN) mm	Drawer width (L) mm	Frontal width (LF) mm	Internal width (L1) mm	Drawer depth (P) mm	Internal depth (P1) mm
350	LV - 15	LV - 6	L - 80	397	338
400				447	388
450				497	438
470				517	458

Excessories - pull-out - 4-sided drawer H 52

Aluminium 4-sided drawer H 52

- Profile height: 52 mm
- Max. drawer width: 1500 mm
- Material: aluminium coated with epoxy-based powder
- Finish: metal grey brown
- Equipped with full-extension Futura runners
- Integrated height and depth adjustments
- Equipped with anti-tipping device
- The drawers are supplied assembled complete with the gasket needed to hold in place the drawer bottom and accessories
- Bottom not included
- Bottom can be made of wood or glass



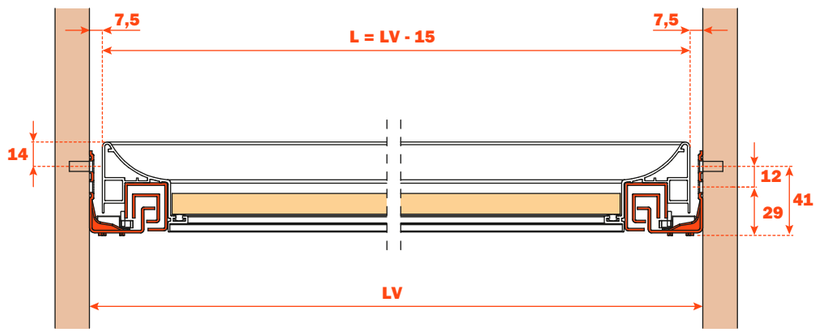

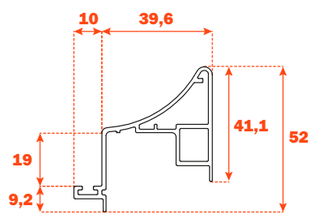

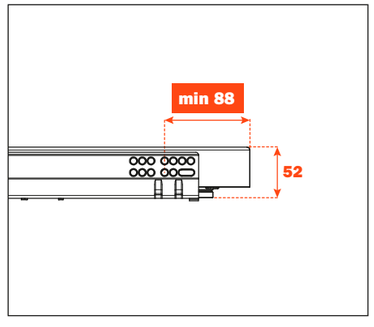

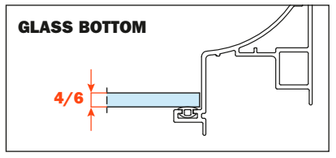

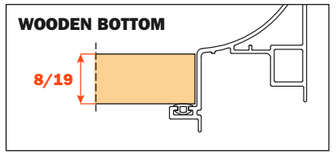

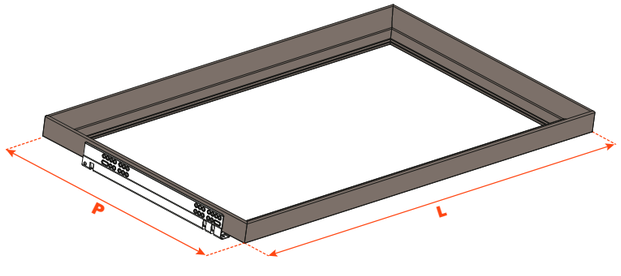

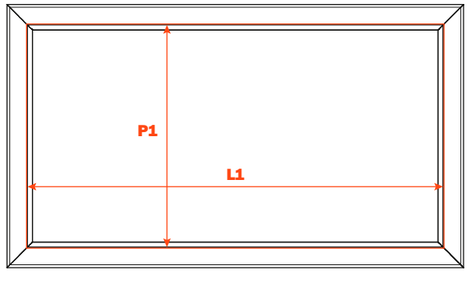

Runner length (LN) mm	Drawer width (L) mm	Internal width (L1) mm	Drawer depth (P) mm	Internal depth (P1) mm
350	LV - 15	L - 80	390	310
400			440	360
450			490	410
470			510	430

Excessories - pull-out - 4-sided drawer H 78

Aluminium 4-sided drawer H 78

- Profile height: 78 mm
- Max. drawer width: 1500 mm
- Material: aluminium coated with epoxy-based powder
- Finish: metal grey brown
- Equipped with full-extension Futura runners
- Integrated height and depth adjustments
- Equipped with anti-tipping device
- The drawers are supplied assembled complete with the gasket needed to hold in place the drawer bottom and accessories
- Bottom not included
- Bottom can be made of wood or glass



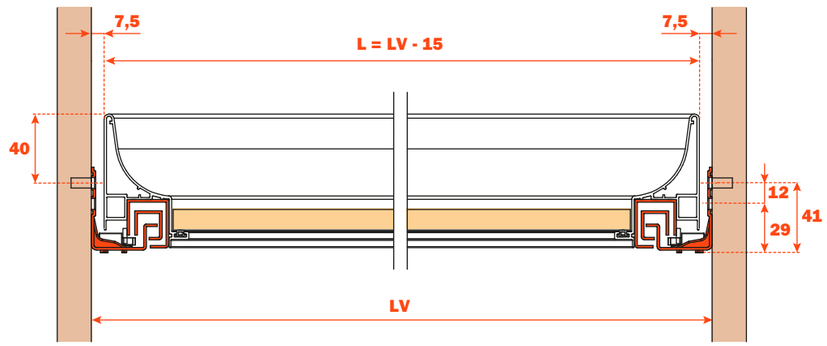

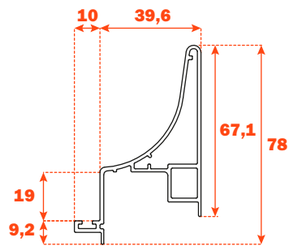

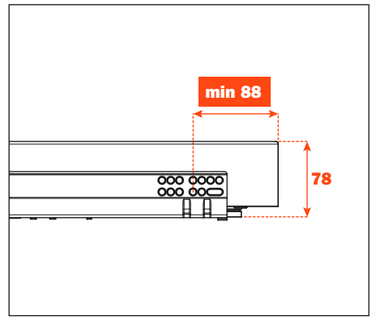

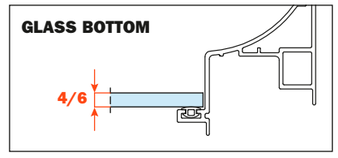

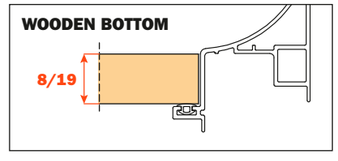

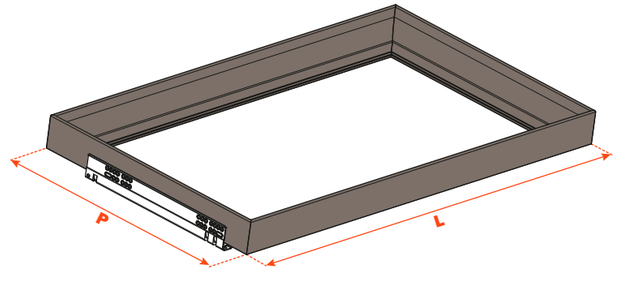

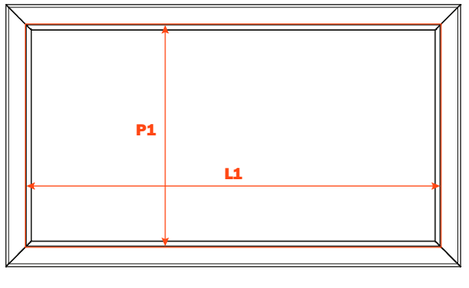

Runner length (LN) mm	Drawer width (L) mm	Internal width (L1) mm	Drawer depth (P) mm	Internal depth (P1) mm
350	LV - 15	L - 80	390	310
400			440	360
450			490	410
470			510	430

Excessories - pull-out - 4-sided drawer H 128

Aluminium 4-sided drawer H 128

- Profile height: 128 mm
- Max. drawer width: 1500 mm
- Material: aluminium coated with epoxy-based powder
- Finish: metal grey brown
- Equipped with full-extension Futura runners
- Integrated height and depth adjustments
- Equipped with anti-tipping device
- The drawers are supplied assembled complete with the gasket needed to hold in place the drawer bottom and accessories
- Bottom not included
- Bottom can be made of wood or glass



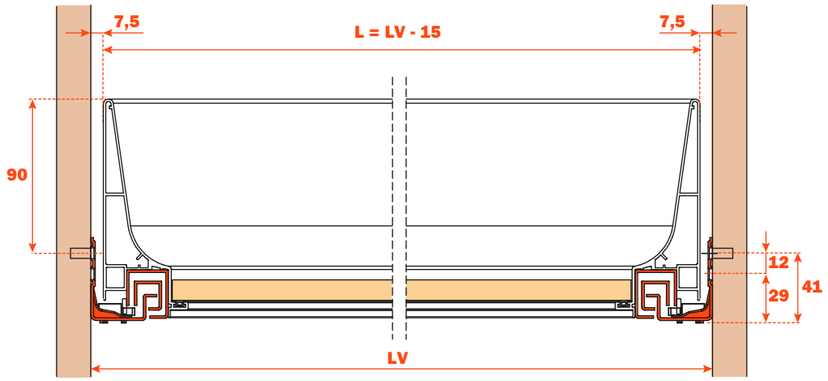

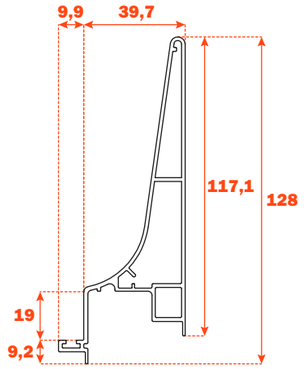

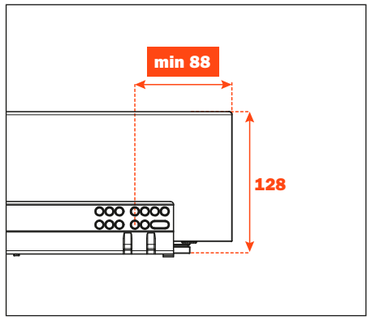

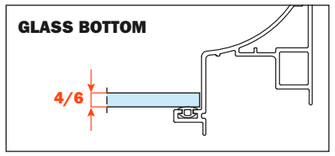

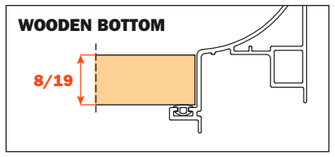

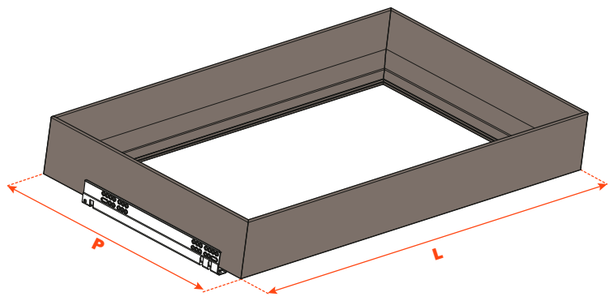

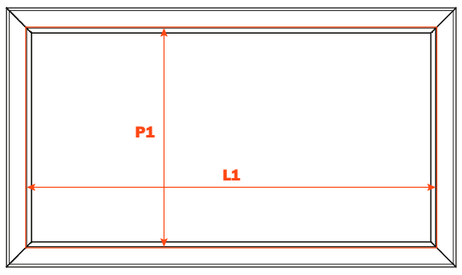

Runner length (LN) mm	Drawer width (L) mm	Internal width (L1) mm	Drawer depth (P) mm	Internal depth (P1) mm
350	LV - 15	L - 80	390	310
400			440	360
450			490	410
470			510	430

Excessories - pull-out - trousers hanger for drawer

Trousers hanger for drawer

- Rail material: aluminium coated with epoxy-based powder
- Finish: metal grey brown
- Recommended quantity: 7 pieces/500 mm
- Complete with soft trim on the upper surface to hold the trousers in place
- Rail supplied with nylon supports for easy location and sliding on the frame



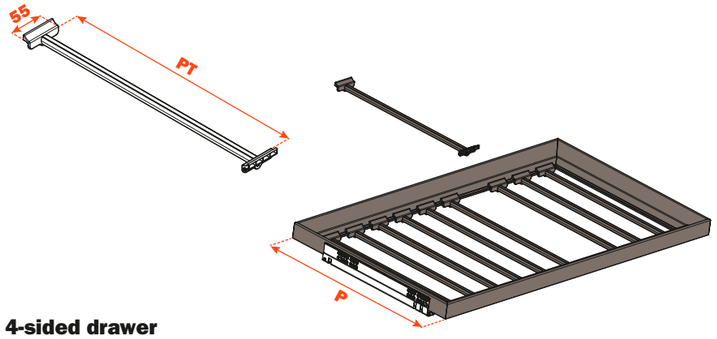

4-sided drawer

Runner length (LN) mm	Drawer depth (P) mm	Rod length (PT) mm
350	390	281
400	440	331
450	490	381
470	510	401

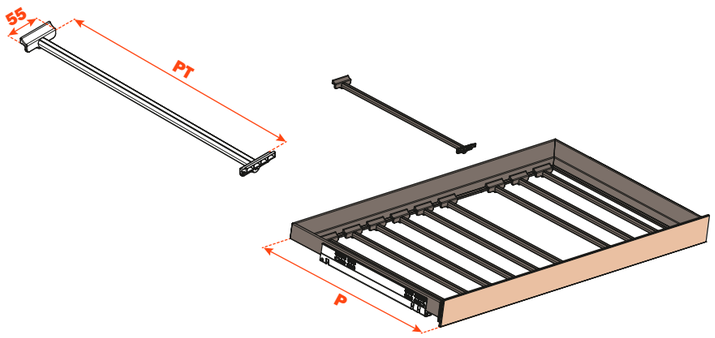

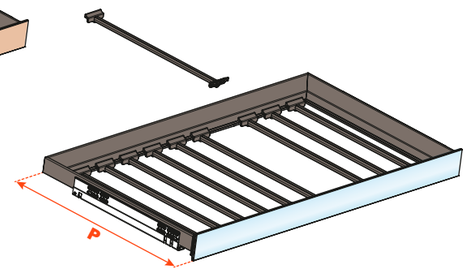

3-sided drawer

Runner length (LN) mm	Drawer depth (P) mm + wooden frontal 12 mm	Drawer depth (P) mm + wooden frontal 19 mm	Drawer depth (P) mm + glass frontal 6+6 mm	Drawer depth (P) mm + glass frontal 6+13 mm	Rod length (PT) mm
350	390	397	390	397	307
400	440	447	440	447	357
450	490	497	490	497	407
470	510	517	510	517	427

Excessories - pull-out - bed linen storage for drawer

Bed linen storage for drawer

- Structure material: aluminium coated with epoxy-based powder
- Finish: metal grey brown
- The containers are made of quilted fabric in Tasmania grey, easily removable from the frame thanks to Velcro fastenings
- Custom-made according to the drawer dimensions:
  - Up to 700 mm width use 1 container
  - From 700 mm width use 2 containers



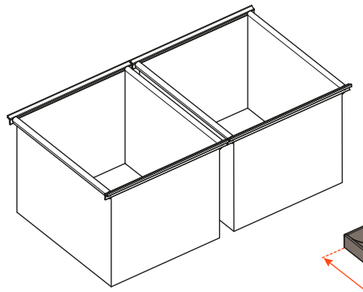

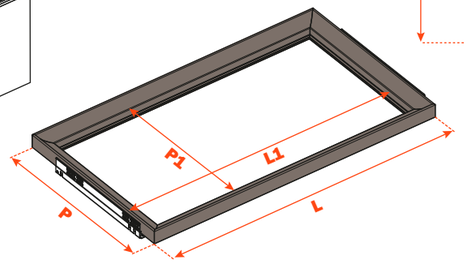

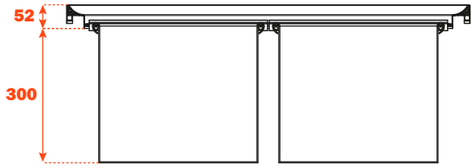

LV = cabinet width

4-sided drawer

Runner length (LN) mm	Drawer width (L) mm	Internal width (L1) mm	4-SIDED drawer depth (P) mm	Internal depth (P1) mm
350	LV - 15	L - 80	390	310
400			440	360
450			490	410
470			510	430

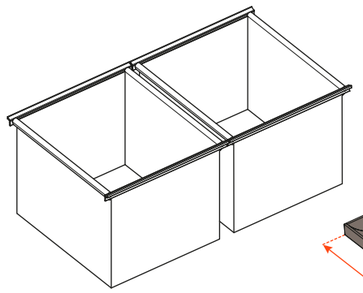

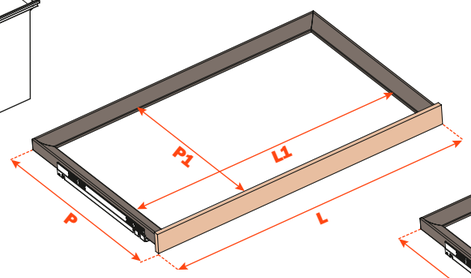

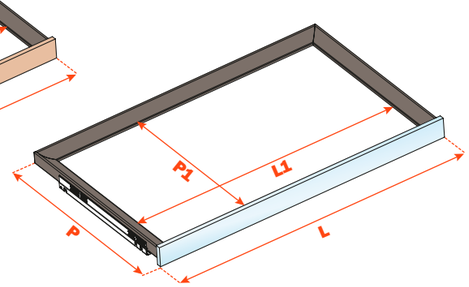

3-sided drawer

Runner length (LN) mm	Drawer width (L) mm	Internal width (L1) mm	3-SIDED drawer depth (P) mm + wooden frontal 12 mm or glass frontal 6+6 mm	3-SIDED drawer depth (P) mm + wooden frontal 19 mm or glass frontal 6+13 mm	Internal depth (P1) mm
350	LV - 15	L - 80	390	397	338
400			440	447	388
450			490	497	438
470			510	517	458

Excessories - pull-out - wired shoe rack for drawer

Shoe rack for drawer

- Shoe rack material: aluminium coated with epoxy-based powder
- Finish: metal grey brown
- Max. width: 1200 mm
- Made in a single piece to suit drawer size
- Easy to install, it requires no fixing
- It holds two rows of shoes



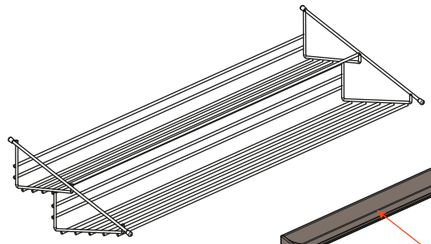

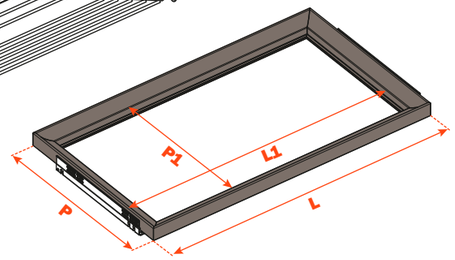

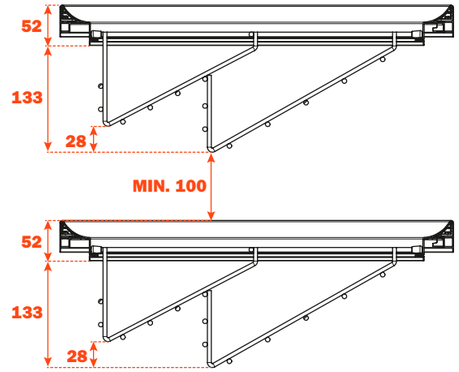

LV = cabinet width

4-sided drawer

Runner length (LN) mm	Drawer width (L) mm	Internal width (L1) mm	Drawer depth (P) mm	Internal depth (P1) mm
450	LV - 15	L - 80	490	410
470			510	430

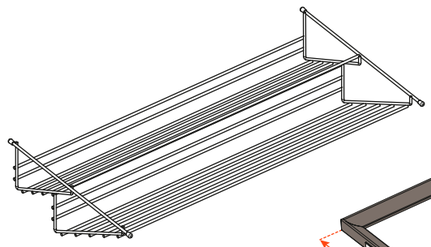

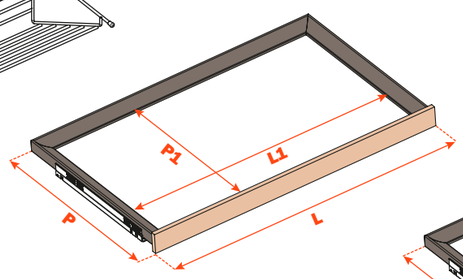

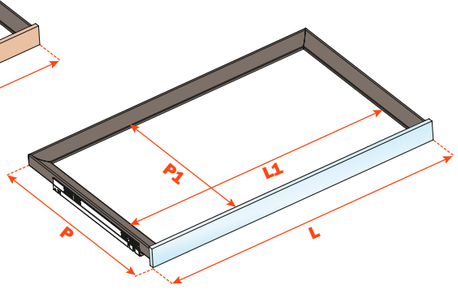

3-sided drawer

Runner length (LN) mm	Drawer width (L) mm	Internal width (L1) mm	3-SIDED drawer depth (P) mm + wooden frontal 12 mm or glass frontal 6+6 mm	3-SIDED drawer depth (P) mm + wooden frontal 19 mm or glass frontal 6+13 mm	Internal depth (P1) mm
450	LV - 15	L - 80	490	497	438
470			510	517	458

Excessories - pull-out - metal shoe rack for drawer

Shoe rack for drawer

- Shoe rack material: coated perforated metal sheet
- Finish: metal grey brown
- Max. width: 1500 mm
- Made in two pieces
- Easy to install, it requires no fixing
- It holds two rows of shoes
- It can be upgraded with 2 imitation leather base inserts

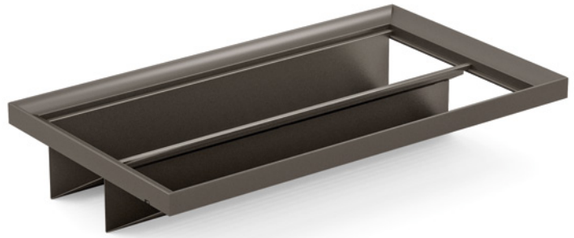

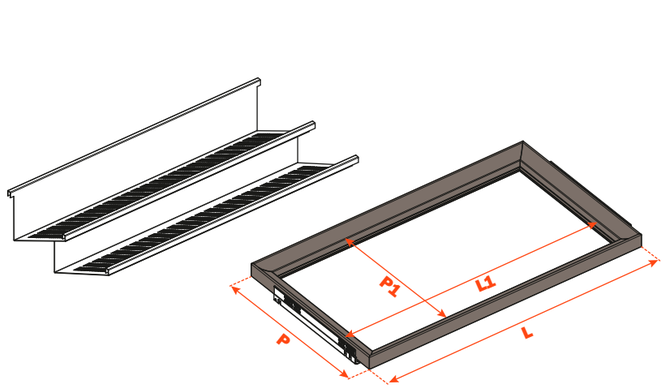

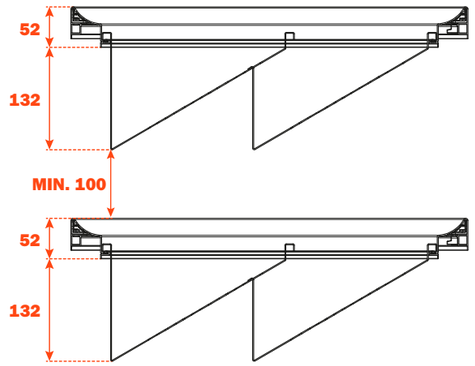

LV = cabinet width

4-sided drawer

Runner length (LN) mm	Drawer width (L) mm	Internal width (L1) mm	Drawer depth (P) mm	Internal depth (P1) mm
450	LV - 15	L - 80	490	410
470			510	430

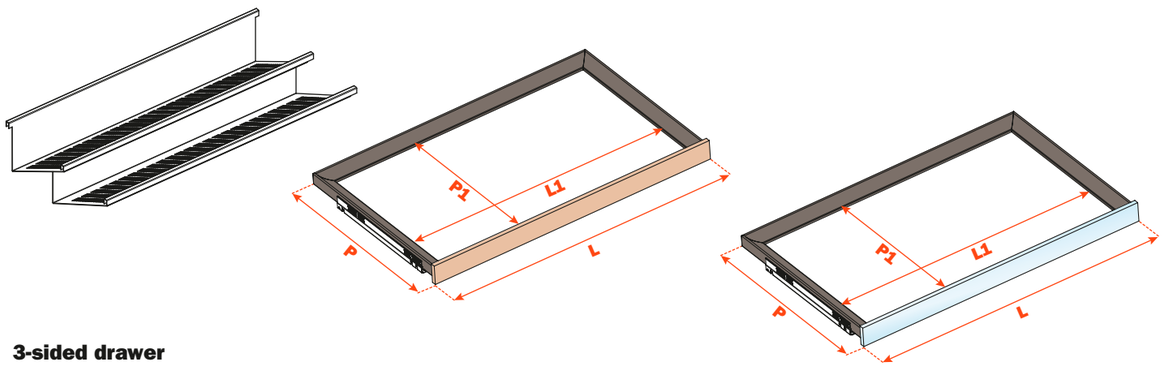

3-sided drawer

Runner length (LN) mm	Drawer width (L) mm	Internal width (L1) mm	3-SIDED drawer depth (P) mm + wooden frontal 12 mm or glass frontal 6+6 mm	3-SIDED drawer depth (P) mm + wooden frontal 19 mm or glass frontal 6+13 mm	Internal depth (P1) mm
450	LV - 15	L - 80	490	497	438
470			510	517	458

Imitation leather inserts to be ordered separately.
Finish code number on page 46

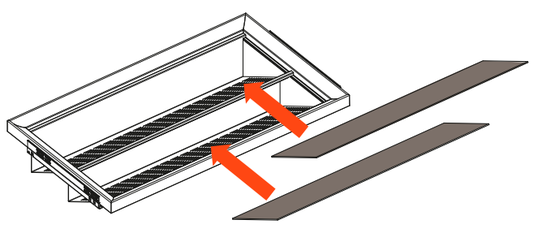

Excessories - pull-out - drawers alignment

With the same side drilling, 4-sided drawers **are frontally aligned** with 3-sided drawers with wooden frontal (12 mm thickness) and with 3-sided drawers with glass frontal (6 mm thickness + 6 mm profile thickness), as illustrated below.

With the same side drilling, 4-sided drawers **are not frontally aligned** with 3-sided drawers with wooden frontal (19 mm thickness) and with 3-sided drawers with glass frontal (6 mm thickness + 13 mm profile thickness), as illustrated below.

4-SIDED drawer

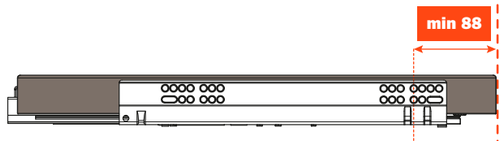

4-SIDED drawer

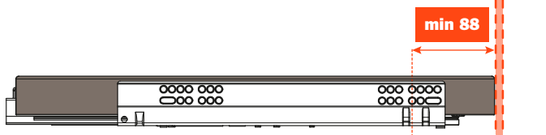

3-SIDED drawer
for wooden frontal, 12 mm thickness

3-SIDED drawer
for wooden frontal, 19 mm thickness

3-SIDED drawer
for glass frontal, 6 mm thickness + profile, 6 mm thickness

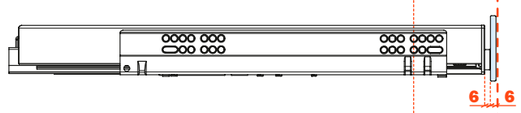

3-SIDED drawer
for glass frontal, 6 mm thickness + profile, 13 mm thickness

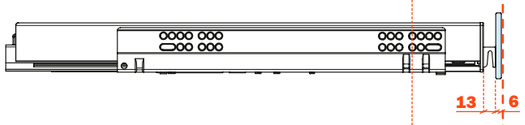

Excessories - pull-out - spacers

Spacers

- Material: aluminium coated with epoxy-based powder
- Finish: metal grey brown



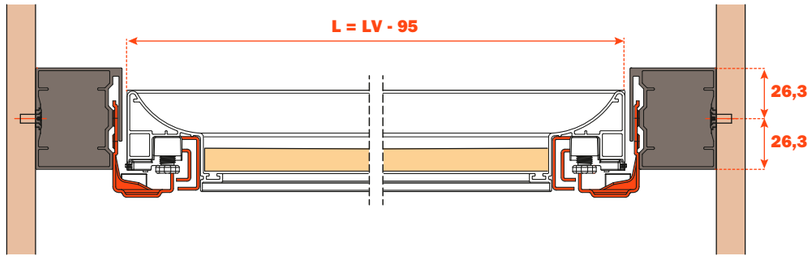

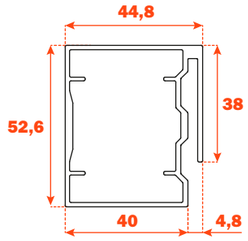

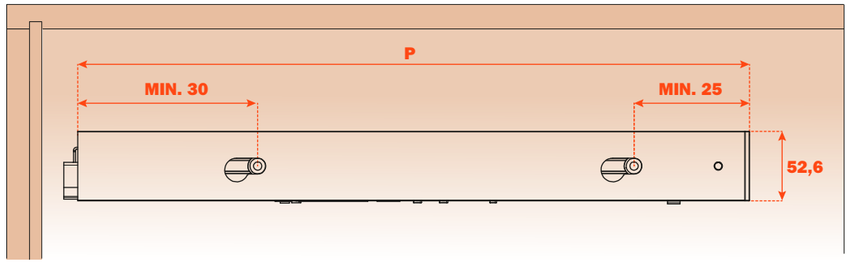

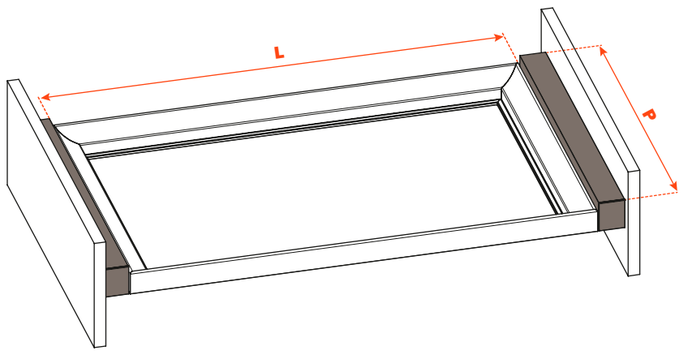

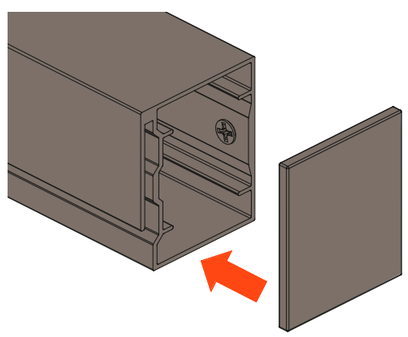

Runner length (LN) mm	4-SIDED drawer/spacer depth (P) mm	3-SIDED drawer/spacer depth (P) mm + wooden frontal 12 mm or glass frontal 6+6 mm	3-SIDED drawer/spacer depth (P) mm + wooden frontal 19 mm or glass frontal 6+13 mm
350	390	390	397
400	440	440	447
450	490	490	497
470	510	510	517

Spacers with 3-SIDED drawer for WOODEN FRONTAL



Frontal drillings

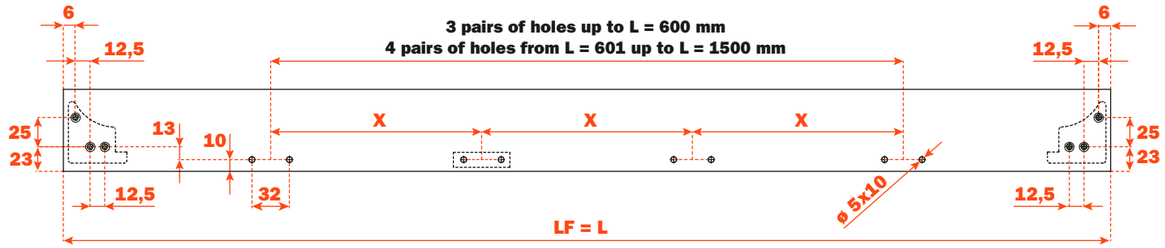

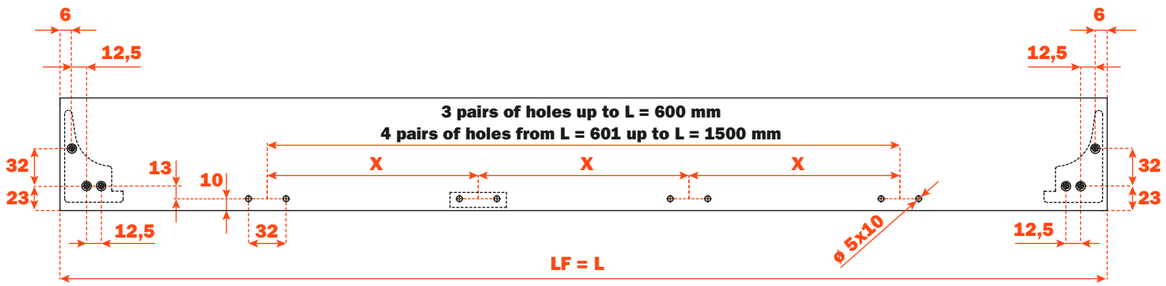

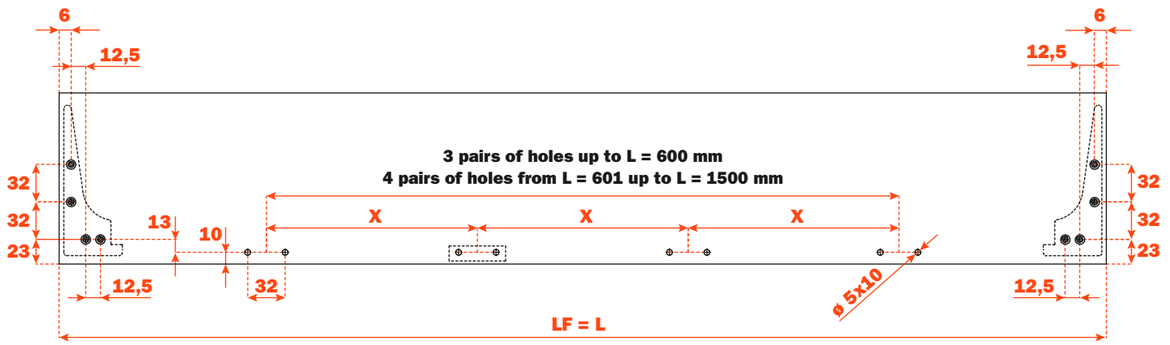

Excessories - pull-out - spacers

Spacers with 3-SIDED drawer for GLASS FRONTAL



Fixing the profile to the frontal

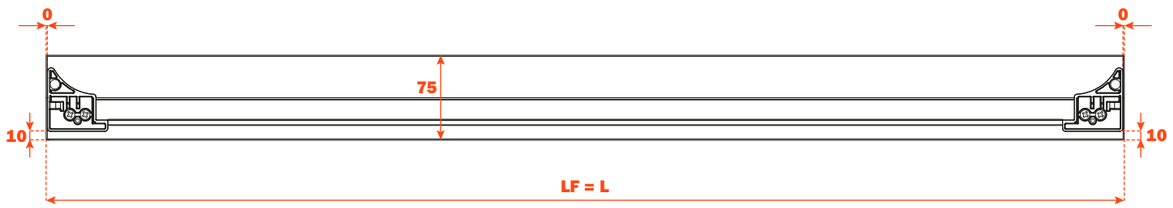

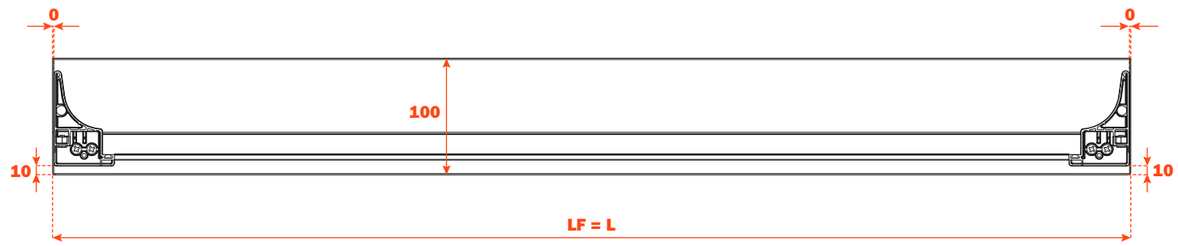

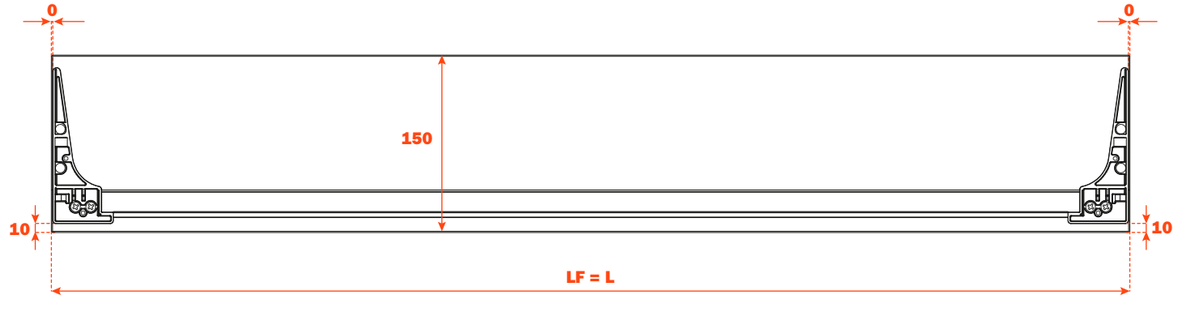

Guidelines to fix spacers

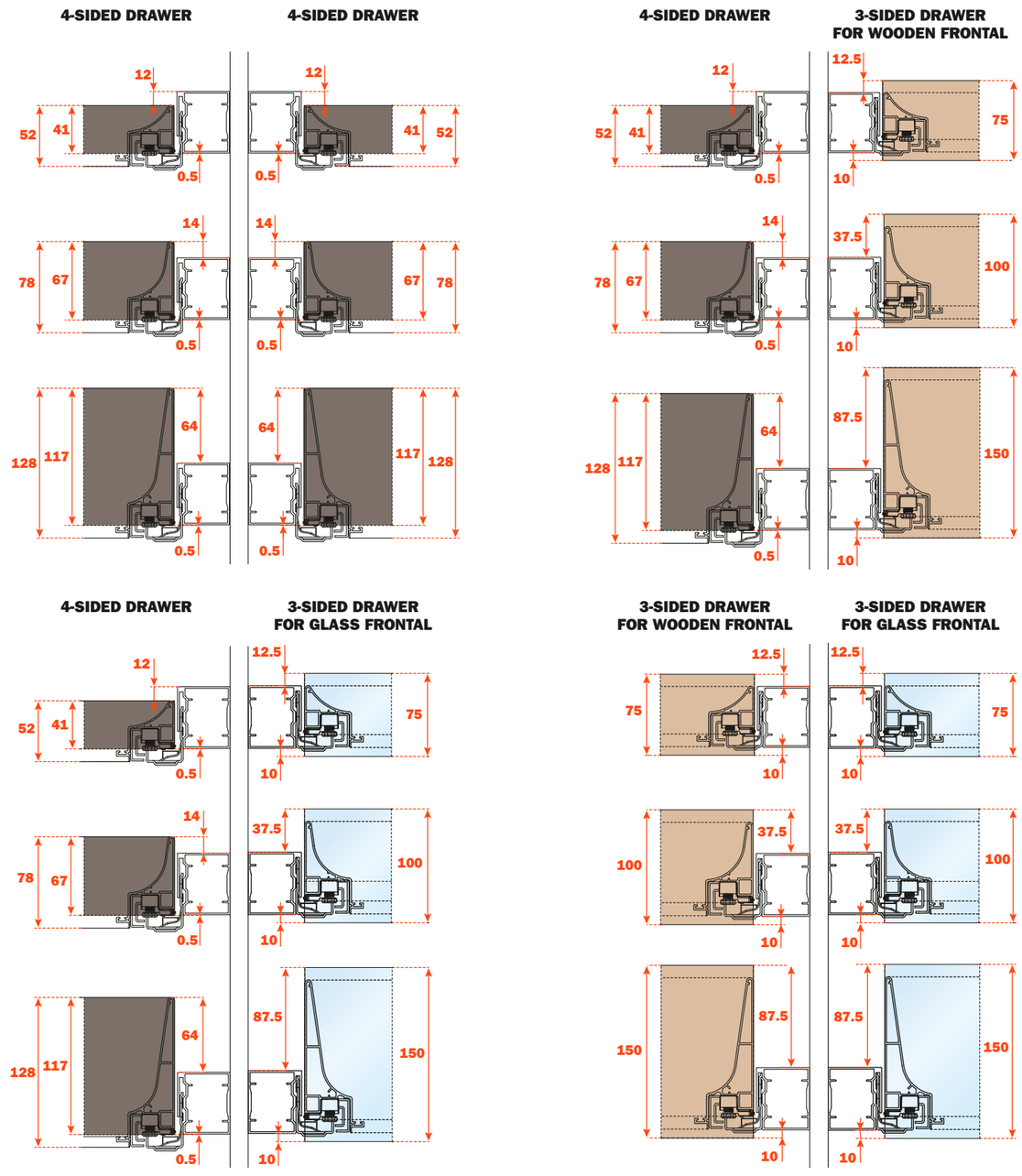

FIXING 4-SIDED DRAWERS
It is recommended that the runners are fixed to the cabinet using the upper holes

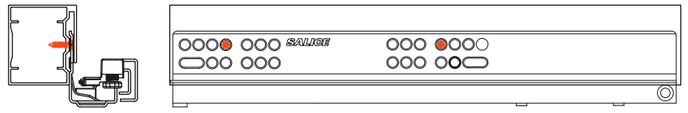

FIXING 3-SIDED DRAWERS
It is recommended that the runners are fixed to the cabinet using the lower holes

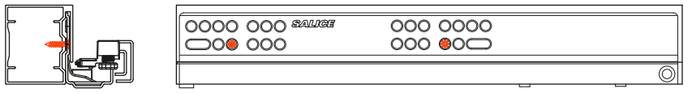

Excessories - pull-out - spacers - assembly instructions

The spacers enable the drawer to be fully opened without impedance from hinged or sliding doors.
They feature an innovative quick-fixing device which ensures that the runners are correctly and accurately installed.

1. Insert the runner into the spacer

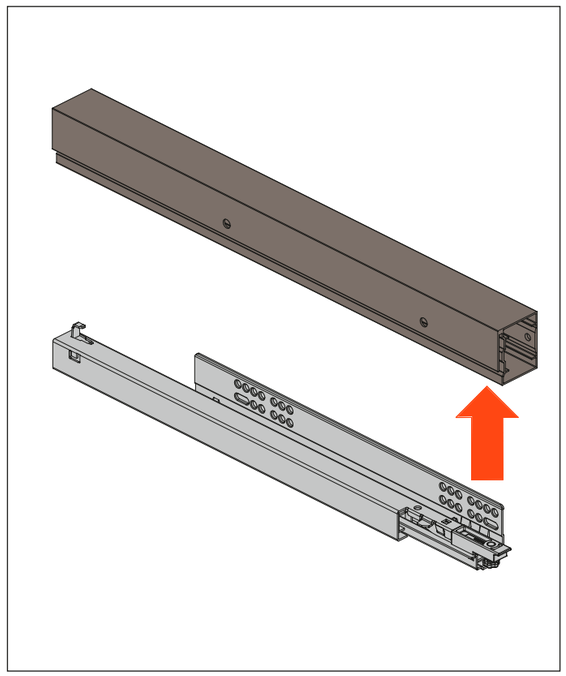

2. Fix the runner to the spacer using the screws provided

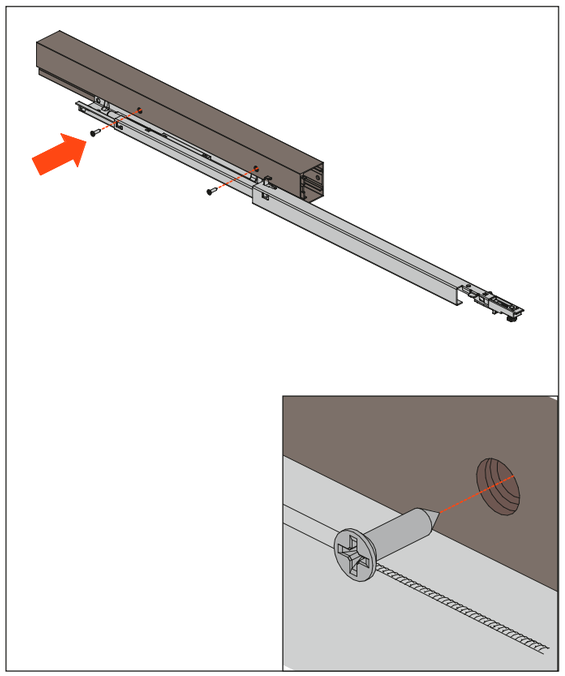

3. Screw-fix the spacer supports to the cabinet side

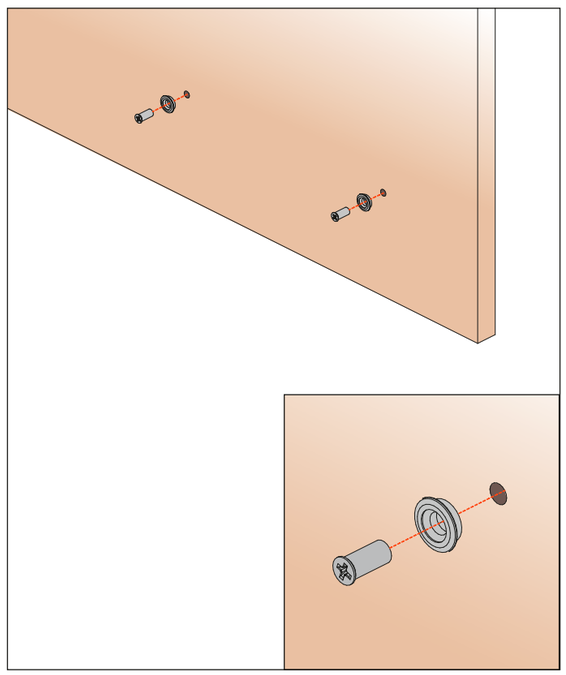

4. Position the spacer onto the supports

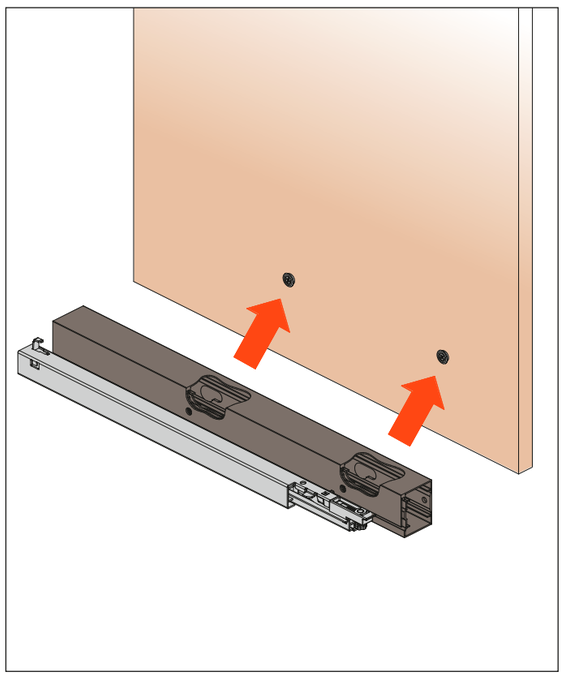

5. Slide the spacer backwards to locate the supports in their keyhole recesses

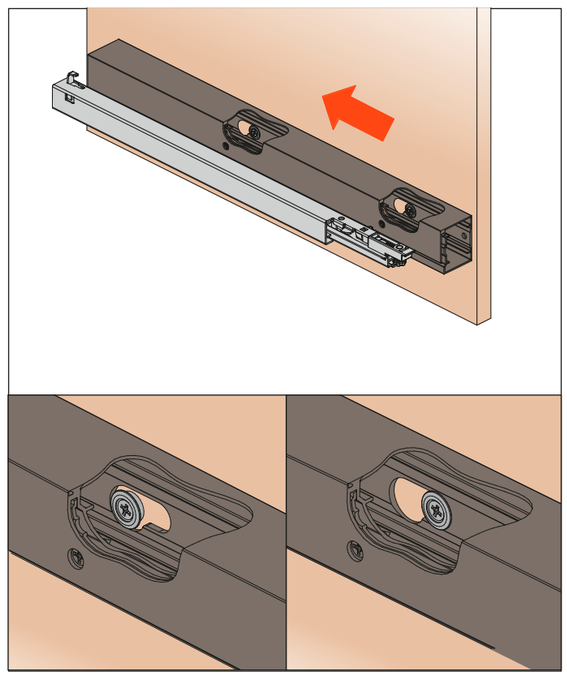

6. Secure the spacer in position using the front fixing screw

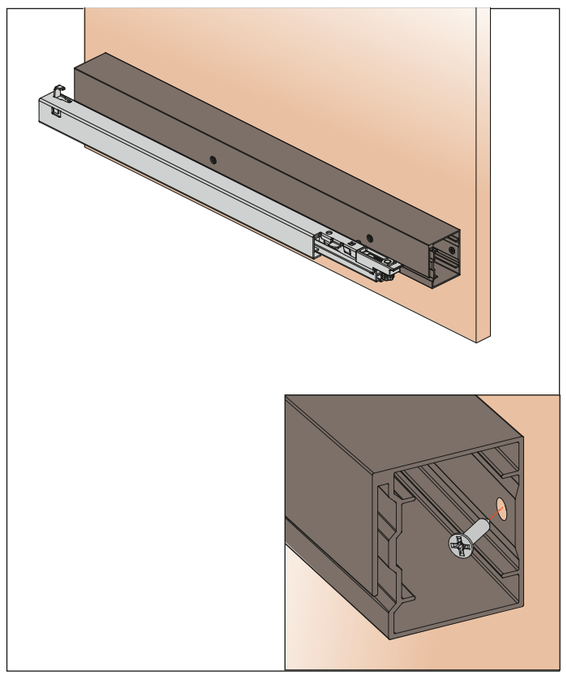

7. Insert the end caps

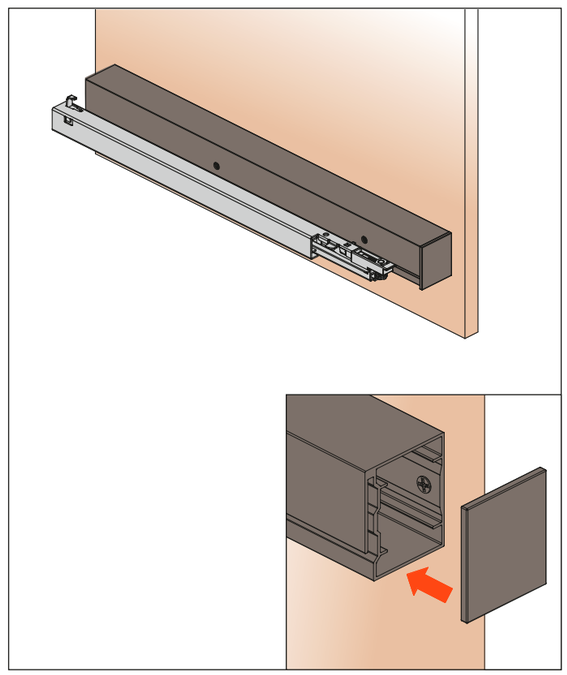

8. Install the drawer onto the runners

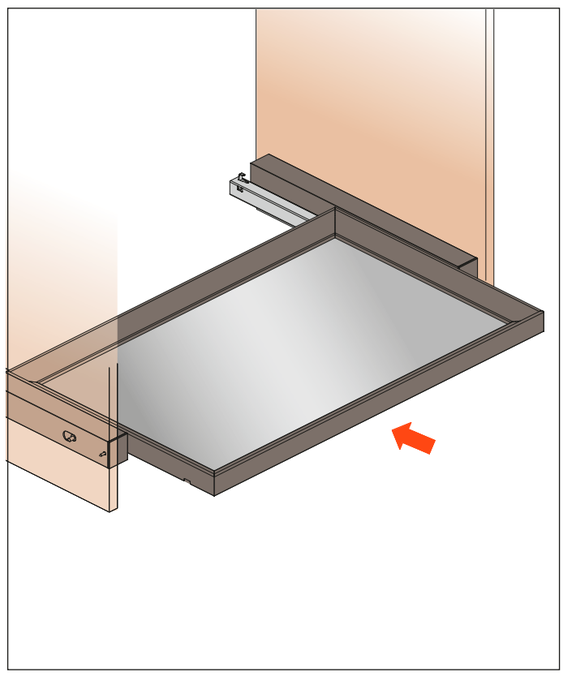

Excessories - shelves - aluminium frame

Shelf with aluminium frame

- Profile height: 36 mm
- Material: aluminium coated with epoxy-based powder
- Finish: metal grey brown
- Max. width: 1500 mm
- Fixing: side fixed with slide and lock device
- Complete with gasket to hold glass inlay in position
- Glass not supplied
- Can be supplied with 2700K/4000K Dual color, 24V integral LED light and with supports for clothes hanging rails
- Custom made to order by specifying width (L) and depth (P)
- Consumption: 13W/M



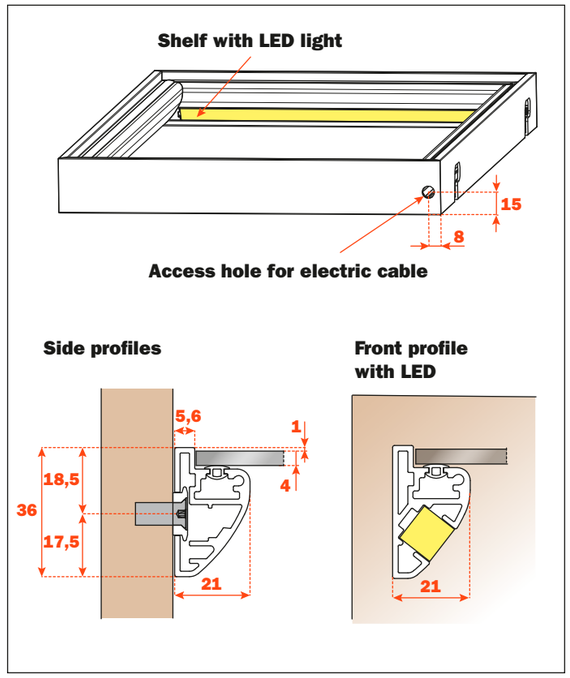

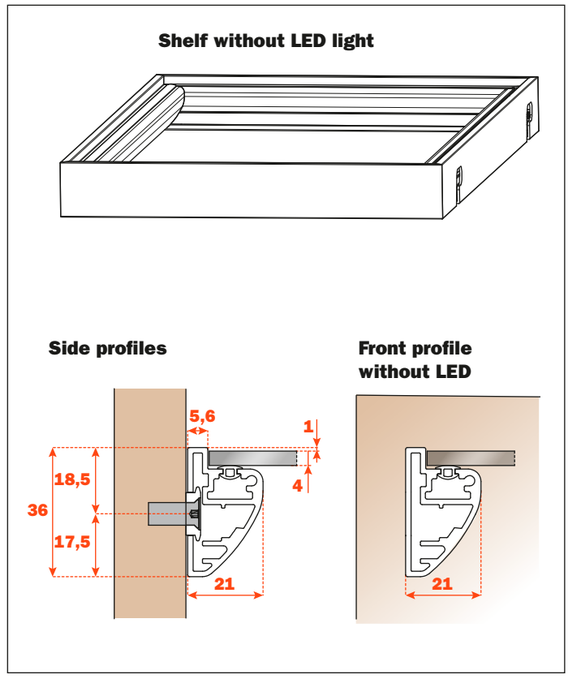

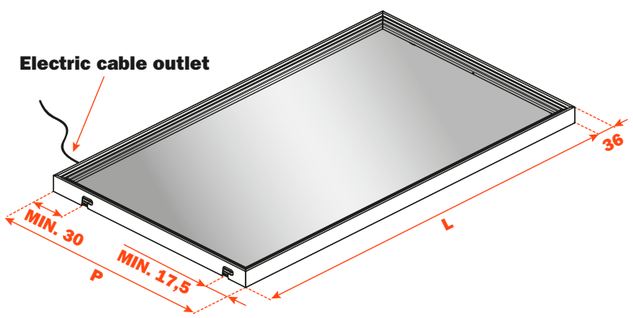

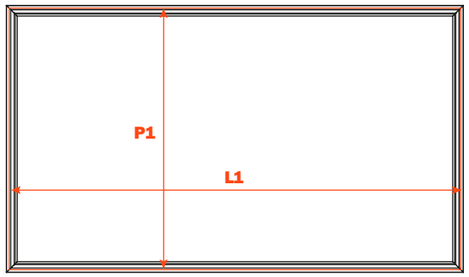

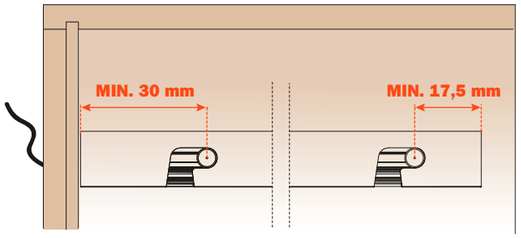

Internal width (L1) mm	Internal depth (P1) mm
L - 11	P - 11

Excessories - shelves - hanger rail for clothes and rail-holder supports

VE80DAHA0133B = Hanger rail for clothes, 1000 mm length
VE80DAHA0233B = Hanger rail for clothes, 1000 mm length
VE80GMRA00533B = Side rail-holder supports



Hanger rail for clothes and rail-holder supports for shelf with aluminium frame

- Hanger rail material: aluminium, coated with epoxy-based powder, section 15x30 mm
- Supports material: die-cast, coated with epoxy-based powder
- Finish: metal grey brown
- Max. recommended load capacity:
  - up to 1200 mm width: 30 Kg
  - from 1201 mm to 1500 mm width: 15 Kg
- Packing: 20 pieces per box
- Custom-length hanger rail available when ordering more than 20 pieces

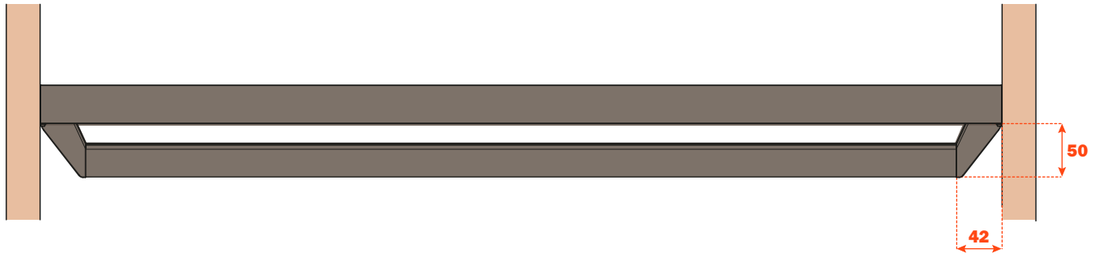

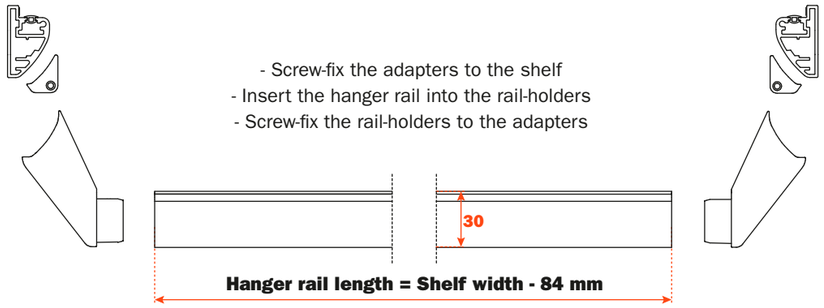

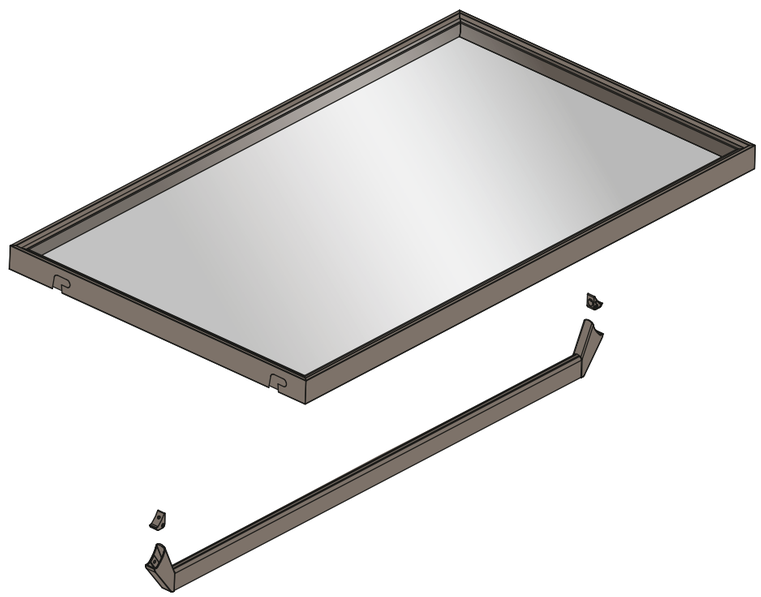

Excessories - shelves - aluminium frame - assembly instructions

1. Screw-fix the supports to the cabinet side

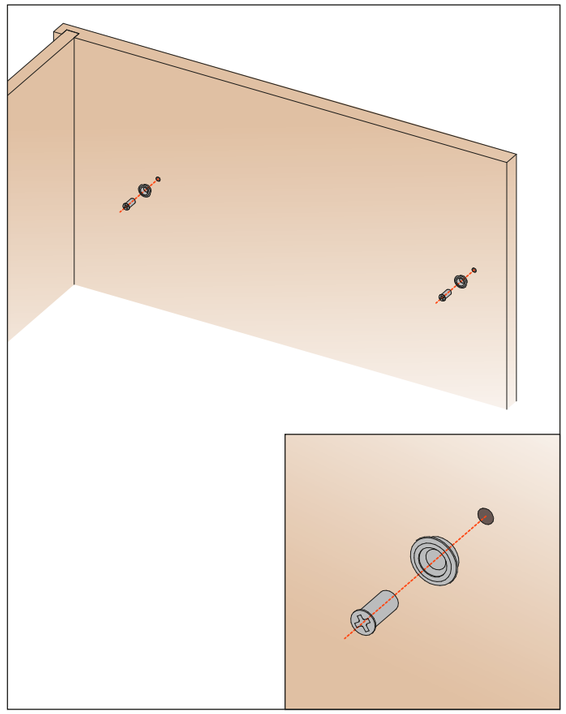

2. Place the shelf onto the supports

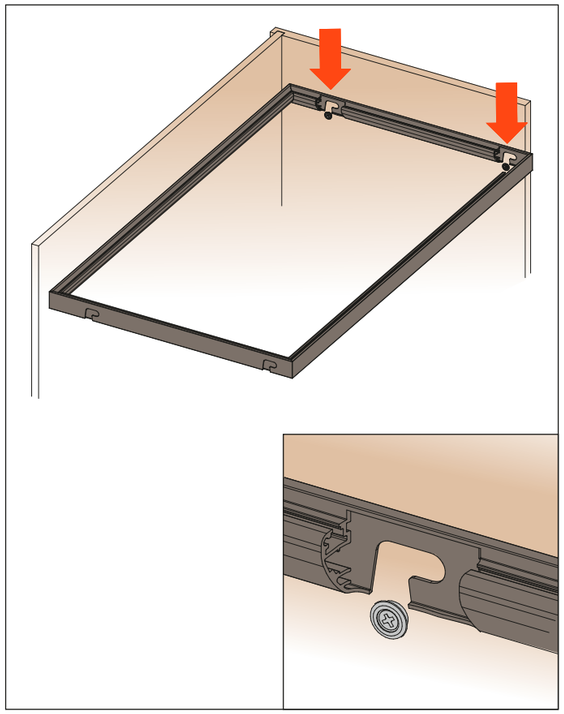

3. Slide the shelf backwards to secure it on the support

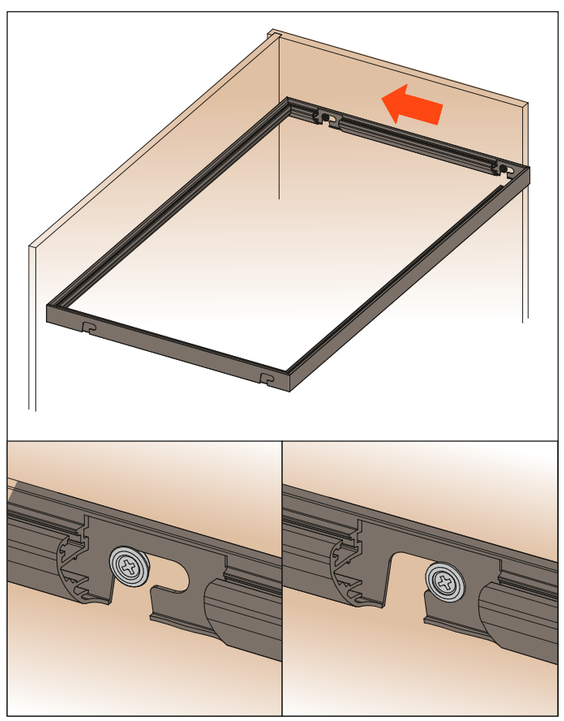

4. Insert the locking clips

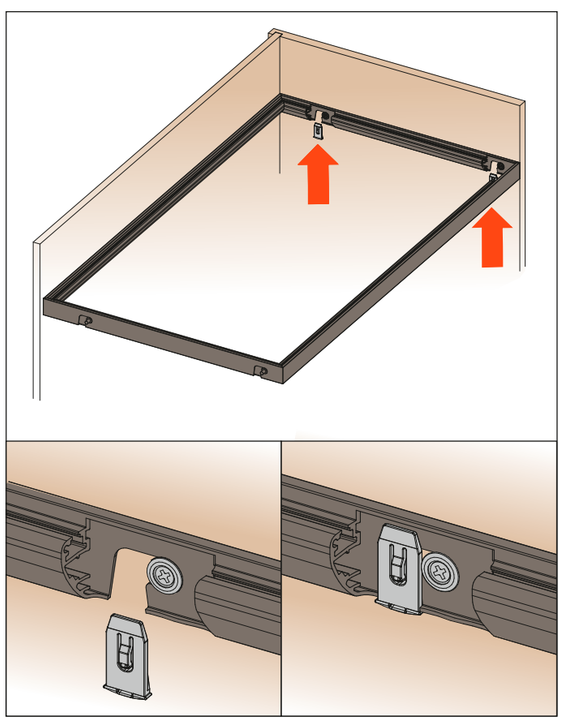

Excessories - shelves - aluminium frame - electrical components

Code number	Transformer 24VDC - 10 outlets
VE80EAXA001XXA	MAX. 60W - 220/230V - MAX. 2,5A - EU
VE80EAXA002XXA	MAX. 120W - 220/230V - MAX. 5A - EU
VE80EBXA032XXA	MAX. 60W - 220/230V - MAX. 2,5A - UK
VE80EBXA033XXA	MAX. 120W - 220/230V - MAX. 5A - UK
VE80EBXA034XXA	MAX. 60W - 120V - MAX. 2,5A - USA
VE80EBXA035XXA	MAX. 96W - 120V - MAX. 4A - USA

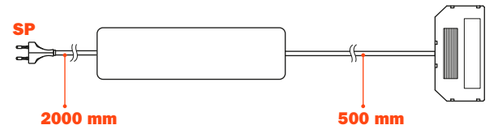

Code number	* Transformer with wireless control 24VDC - 10 outlets
VE80EAXA003XXA	MAX. 60W - 220/230V - MAX. 2,5A - EU
VE80EAXA004XXA	MAX. 120W - 220/230V - MAX. 5A - EU
VE80EBXA036XXA	MAX. 60W - 220/230V - MAX. 2,5A - UK
VE80EBXA037XXA	MAX. 120W - 220/230V - MAX. 5A - UK
VE80EBXA038XXA	MAX. 60W - 120V - MAX. 2,5A - USA
VE80EBXA039XXA	MAX. 96W - 120V - MAX. 4A - USA

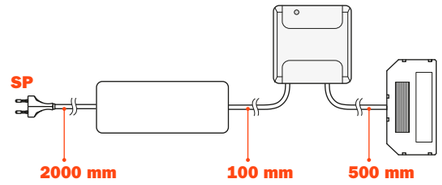

Code number	Wireless control
VE80EBXA001XXA	Wall mounted wireless control with dimmer function for light intensity and colour temperature. It transforms the standard buttons in wireless control.

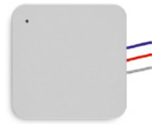

Code number	Wireless control
VE80EBXA002XXA	Wireless control with central push button and dimmer function for light intensity. Dial control to vary colour temperature.

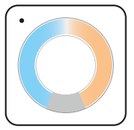

Code number	Wireless control
VE80EBXA003XXA	Recessed wireless touch control with dimmer function for light intensity and colour temperature

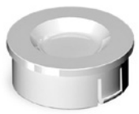

Code number	Wireless control
VE80EBXA004XXA	Wireless touch and PIR (Passive infrared) control with dimmer function for light intensity and colour temperature



Code number	Wireless control
VE80EBXA010XXA	HUB for light control for smartphone, tablet or pc



Code number	IR (Infrared) sensor surface mounted for doors
VE80EBXA020XXA	MAX. 60W - 24 VDC - MAX. 2,5A - 1 door
VE80EBXA021XXA	MAX. 60W - 24 VDC - MAX. 2,5A - 2 doors*

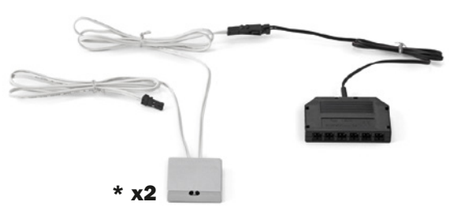

EDC function (Emotion Dual Color): colour temperature varies from “warm” to “natural”

Dimmer function

Range: 15 m internal area

BATTERY

Battery type: CR2450

Estimated battery life: 3 years

* Compatible with transformer with wireless control receiver

- Transformer: 230V
- Type of communication: Wi-Fi
- Number of devices, smartphone, tablet or pc simultaneously connected: 50
- Number of manageable receivers: 20
- Protection level: IP20
- Function temperature: -20 +55°C
- Dimensions: 174x46x35 mm

Excessories - shelves - aluminium frame - electrical components

Application examples

Activation by domestic switch

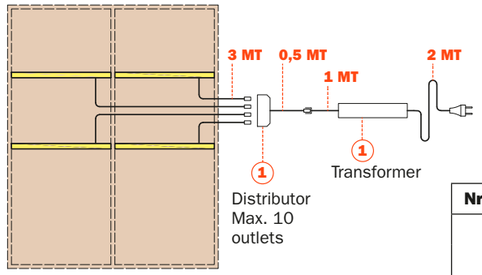

Nr.	Code Number	Description
1	**VE80EAXA001XXA**	24V 60W transformer, 10 outlets (1/1)
	VE80EAXA002XXA	24V 120W transformer, 10 outlets (1/9
	VE80EBXA032XXA	220-240V 24VDC 60W SLIM transformer, 10 outlets SP, UK
	VE80EBXA033XXA	220-240V 24VDC 120W transformer, 10 outlets SP, UK
	VE80EBXA034XXA	120VAC/24VDC P=60W transformer, + 10 outlets +SP, NA
	VE80EBXA035XXA	120VAC/24VDC P=96W transformer, + 10 outlets +SP, NA

Activation by smart switch controller

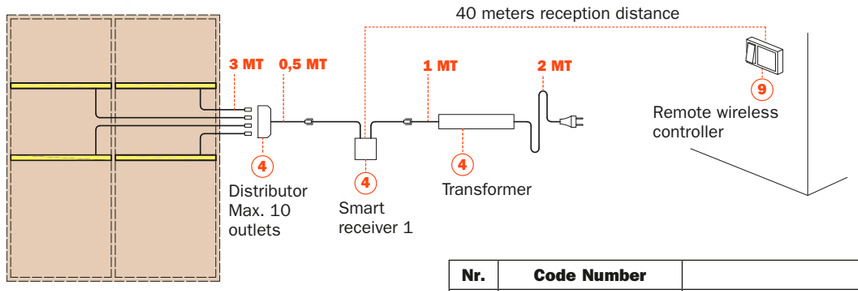

Nr.	Code Number	Description
4	**VE80EAXA003XXA**	24V 60W transformer, 10 outlets + receiver (1/1)
	VE80EAXA004XXA	24V 120W transformer, 10 outlets + receiver (1/1)
	VE80EBXA036XXA	SMART 1 EDC + DRIVER 60W 24V SP, UK
	VE80EBXA037XXA	SMART 1 EDC + DRIVER 120W 24V SP, UK
	VE80EBXA038XXA	SMART 1 EDC + DRIVER 60W 24V 120V SP, NA
	VE80EBXA039XXA	SMART 1 EDC + DRIVER 96W 24V 120V SP, NA
9	**VE80EBXA001XXA**	Remote wireless control (1/1)

Activation with 1 or 2 IR sensors - External

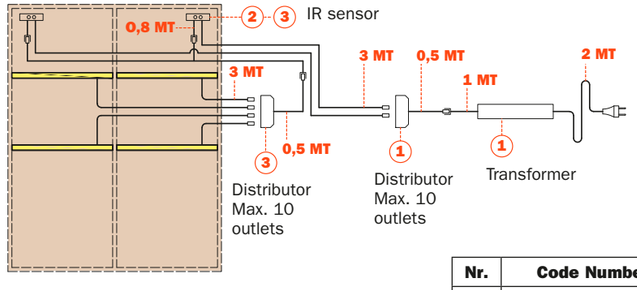

Nr.	Code Number	Description
1	**VE80EAXA001XXA**	24V 60W transformer, 10 outlets (1/1)
	VE80EAXA002XXA	24V 120W transformer, 10 outlets (1/1)
	VE80EBXA032XXA	220-240V 24VDC 60W SLIM transformer, 10 outlets SP, UK
	VE80EBXA033XXA	220-240V 24VDC 120W transformer, 10 outlets SP, UK
	VE80EBXA034XXA	120VAC/24VDC P=60W transformer, + 10 outlets +SP, NA
	VE80EBXA035XXA	120VAC/24VDC P=96W transformer, + 10 outlets +SP, NA
2	**VE80EBXA020XXA**	IR sensor surface mounted for 1 door (1/1)
3	**VE80EBXA021XXA**	IR sensor surface mounted for 2 doors (1/1)

Activation with 1 smart controller

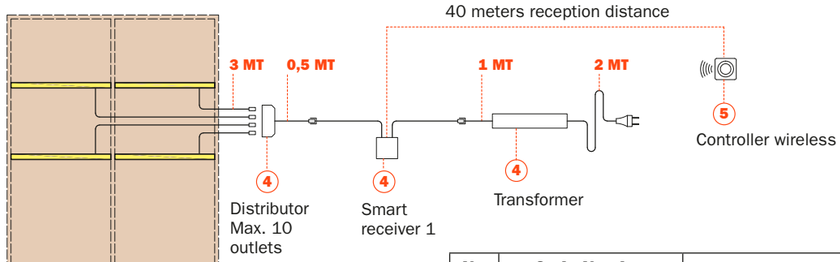

Nr.	Code Number	Description
4	**VE80EAXA003XXA**	24V 60W transformer, 10 outlets + receiver (1/1)
	VE80EAXA004XXA	24V 120W transformer, 10 outlets + receiver (1/1)
	VE80EBXA036XXA	SMART 1 EDC + DRIVER 60W 24V SP, UK
	VE80EBXA037XXA	SMART 1 EDC + DRIVER 120W 24V SP, UK
	VE80EBXA038XXA	SMART 1 EDC + DRIVER 60W 24V 120V SP, NA
	VE80EBXA039XXA	SMART 1 EDC + DRIVER 96W 24V 120V SP, NA
5	**VE80EBXA002XXA**	On/off wireless controller + Dimmer (1/1)

Activation with 1 smart touch or smart sensor controller

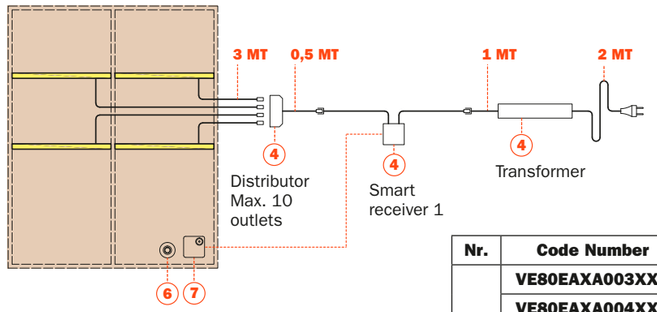

Nr.	Code Number	Description
4	**VE80EAXA003XXA**	24V 60W transformer, 10 outlets + receiver (1/1)
	VE80EAXA004XXA	24V 120W transformer, 10 outlets + receiver (1/1)
	VE80EBXA036XXA	SMART 1 EDC + DRIVER 60W 24V SP, UK
	VE80EBXA037XXA	SMART 1 EDC + DRIVER 120W 24V SP, UK
	VE80EBXA038XXA	SMART 1 EDC + DRIVER 60W 24V 120V SP, NA
	VE80EBXA039XXA	SMART 1 EDC + DRIVER 96W 24V 120V SP, NA
6	**VE80EBXA003XXA**	On/off recessed wireless controller + Dimmer (1/1)
7	**VE80EBXA004XXA**	On/off IR sensor + Dimmer (1/1)

Activation with Smart home gateway controller

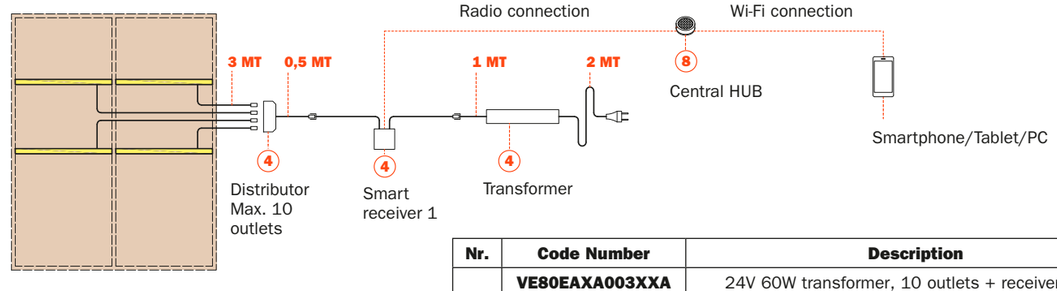

Nr.	Code Number	Description
4	**VE80EAXA003XXA**	24V 60W transformer, 10 outlets + receiver (1/1)
	VE80EAXA004XXA	24V 120W transformer, 10 outlets + receiver (1/1)
	VE80EBXA036XXA	SMART 1 EDC + DRIVER 60W 24V SP, UK
	VE80EBXA037XXA	SMART 1 EDC + DRIVER 120W 24V SP, UK
	VE80EBXA038XXA	SMART 1 EDC + DRIVER 60W 24V 120V SP, NA
	VE80EBXA039XXA	SMART 1 EDC + DRIVER 96W 24V 120V SP, NA
8	**VE80EBXA010XXA**	HUB for mobile controller (1/1)

ARTURO SALICE S.p.A.
VIA PROVINCIALE NOVEDRATESE, 10
22060 NOVEDRATE (COMO) ITALIA
TEL. 031 790424
FAX 031 791508
info.salice@salice.com
www.salice.com

BORTOLUZZI SISTEMI S.p.A.
VIA CADUTI 14 SETTEMBRE 1944, 45
32100 BELLUNO ITALIA
TEL. 0437 930866
FAX 0437 931442
info@bortoluzzi.com
www.bortoluzzi.com

DEUTSCHE SALICE GMBH
RUDOLF DIESEL STR. 10
POSTFACH 1154
74382 NECKARWESTHEIM
TEL. 07233 9807-0
FAX. 07233 9807-16
info.salice@deutschesalice.de
www.deutschesalice.de

SALICE UK LTD.
KINGFISHER WAY
HINCHINGBROOKE BUSINESS PARK
HUNTINGDON CAMBS PE 29 6FN
TEL. 01480 413831
FAX. 01480 451489
info.salice@saliceuk.co.uk
www.saliceuk.co.uk

DEUTSCHE SALICE GMBH
VERKAUFSBÜRO NORD
RINGSTRASSE 36/A30 CENTER
32584 LÖHNE
TEL. 05731 15608-0
FAX. 05731 15608-10
vknord@deutschesalice.de
www.deutschesalice.de

SALICE AMERICA INC.
2123 CROWN CENTRE DRIVE
CHARLOTTE NC. 28227
TEL. 704 8417810
FAX. 704 8417808
info.salice@saliceamerica.com
www.saliceamerica.com

SALICE FRANCE S.A.R.L.
ROUTE DE GOA ZAC LES 3 MOULINS
06600 ANTIBES
TEL. 0493 330069
FAX. 0493 330141
info.salice@salicefrance.com
www.salicefrance.com

SALICE CANADA INC.
3500 RIDGEWAY DRIVE,
UNIT#1
MISSISSAUGA, ONTARIO, L5L 0B4
TEL. 905 8208787
FAX. 905 8207226
info.salice@salicecanada.com
www.salicecanada.com

SALICE ESPANA, S.L.U.
CALLE COPÉRNICO, 11
POLÍGONO INDUSTRIAL
COLL DE LA MANYA
08403 GRANOLLERS (BARCELONA)
TEL. 938 46 88 61
FAX 938 49 11 97
info.salice@saliceespana.es
www.saliceespana.es

SALICE CHINA (SHANGHAI) CO. LTD.
1st FLOOR, B1 BLDG 928 MINGZHU ROAD
XUJING, QINGPU DISTRICT
SHANGHAI 201702 - CHINA
Tel. 021 3988 9880
Fax 021 3988 9882
info.salice@salicechina.com
www.salicechina.com

We reserve the right to change technical specifications without notice.



Digital contents:

- **Presentation in Pdf format**

D0CASS012ENG
Ed. 02 - 03/2019

www.salice.com