Lineabox - 2-sided - H 77 mm

Lineabox metal sides, wooden frontal and back panel.
Height of the side 77 mm - Internal height 45 mm.
For use with Futura full-extension runners: 655 - 6557 - 6555
(consult the general catalogue "Runners and drawers").

- Rapid assembly system, with no machinery or templates needed.
- Rapid mounting and removal of drawer frontal.
- Height, sideways and depth adjustment of the drawer incorporated in the runner fixing clips.
- Bottom thickness:
  - 16 mm
  - 15 mm with insert SMGP15X4XA
- Material: Aluminium
- Sides: 90° cut end
- Finishes: - Stainless steel
  - Champagne
  - Titanium
  - White

Dimensions with Futura full-extension runners

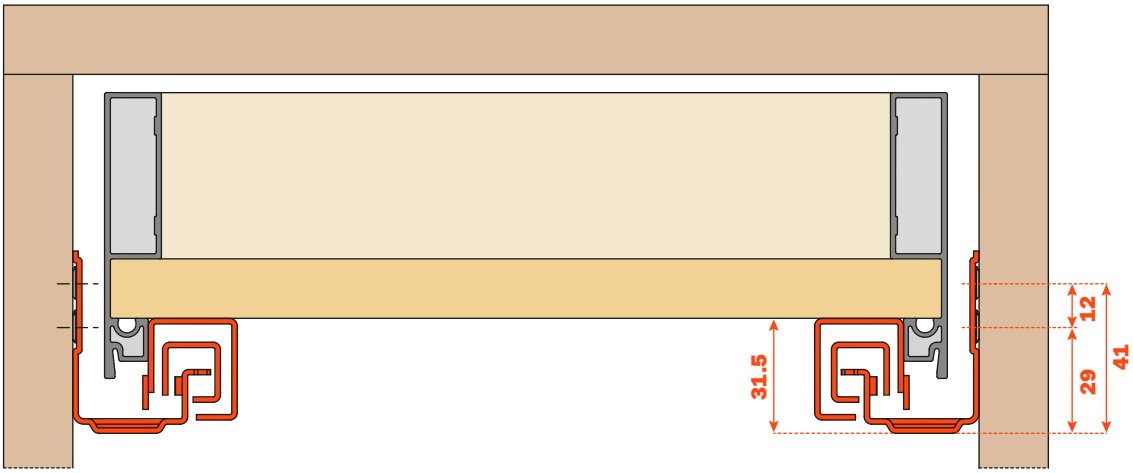

Thickness of the metal side

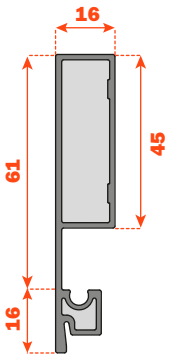

Cutting the sides

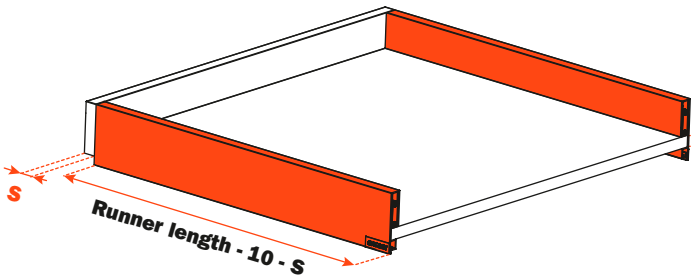

Cutting the back

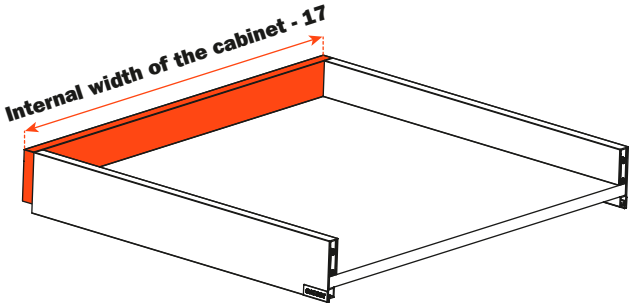

Cutting the bottom

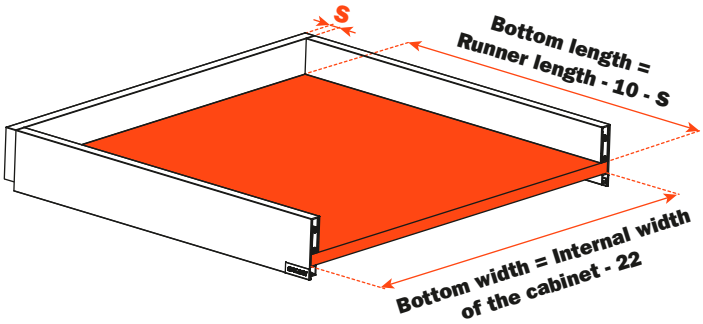

Frontal drilling

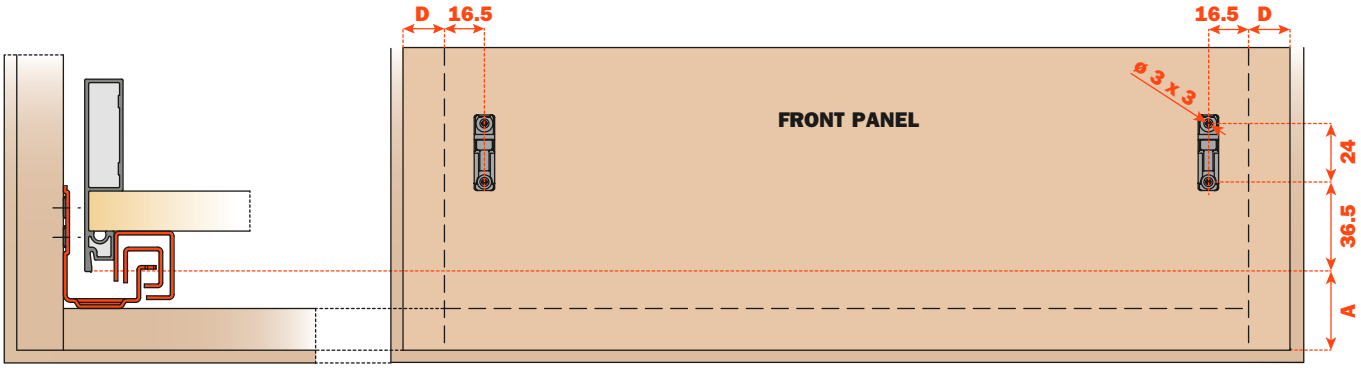

Back drilling

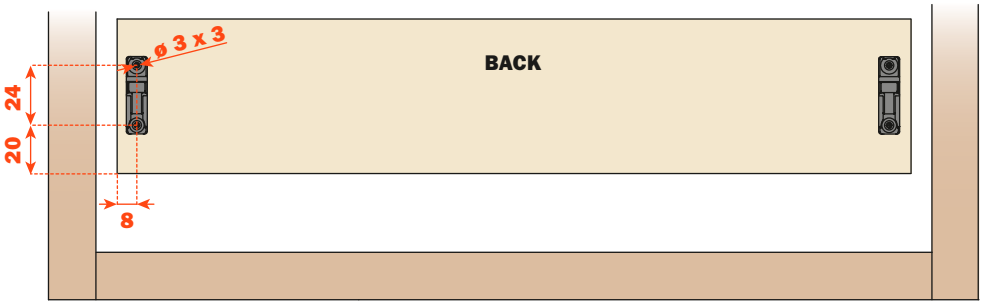

Elements of the drawer
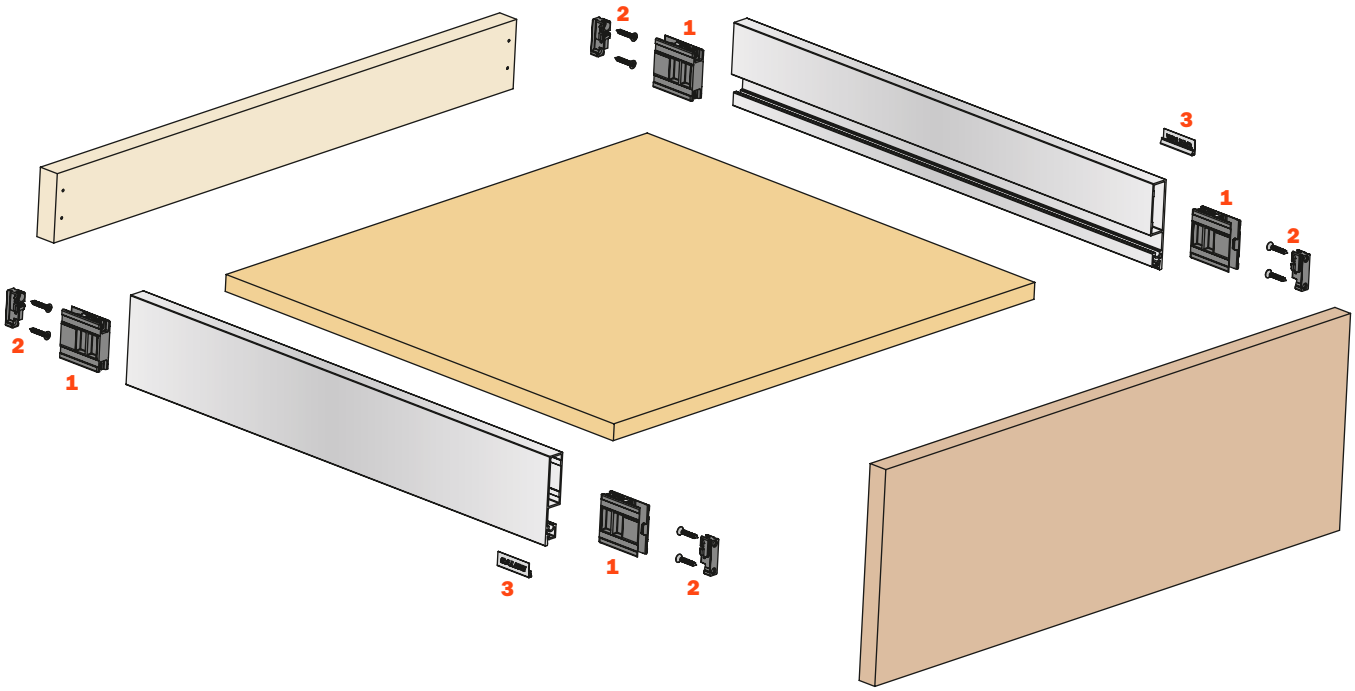
1	Frontal connecting fitting **AMGPXA3**	Nr. 4 pcs.
2	Frontal fixing **SMGP12A3XA**	Nr. 4 pcs.
3	Cover cap (With embossed logo **SCCX83H9** - With silk-screen printed logo **SCXX83H9**)	Nr. 2 pcs. (optional)